SERIES 1300 SMART INDICATOR

USER GUIDE

SERIES 1300 SMART INDICATOR

NOTE: The CYCLE, SHIFT and INCREMENT symbols used on current models may differ from those depicted in this Users Guide. Their position remains the same with CYCLE on the left, SHIFT in center and INCREMENT on right.

DWYER INSTRUMENTS, INC.

P.O. Box 373.

Michigan City, Indiana 46360

Phone: 219/879-8000

Fax: 219/872-9057

Revised January 1995

CONTENTS

1.0 INTRODUCTION

This instrument is a universal digital indicator which supports a wide range of input types. A great advantage with this unit is its ability to adapt to a wide variety of applications. A comprehensive set of programming menus allow the instrument to be entirely re-configured from the keypad.

The diagram below identifies features on the front panel.

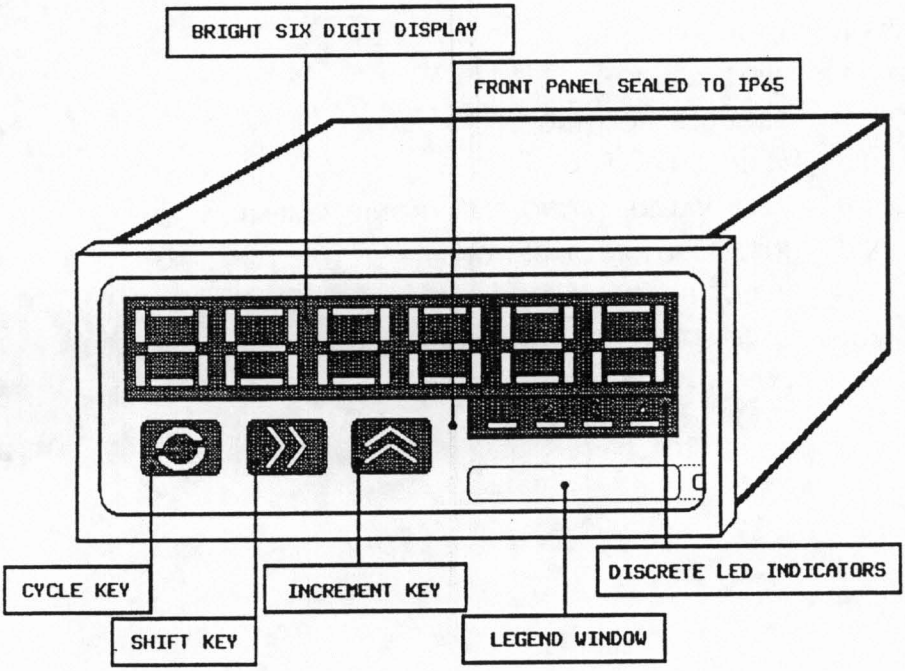

See Appendix C for mechanical installation.

The diagram of the rear panel below shows the slot positions for all electrical connections.

There are two output slots into which the user may fit a range of options, including relays, current re-transmission and voltage output boards. In addition there is also a communications board slot allowing up to 30 units to be directly networked together to a host computer.

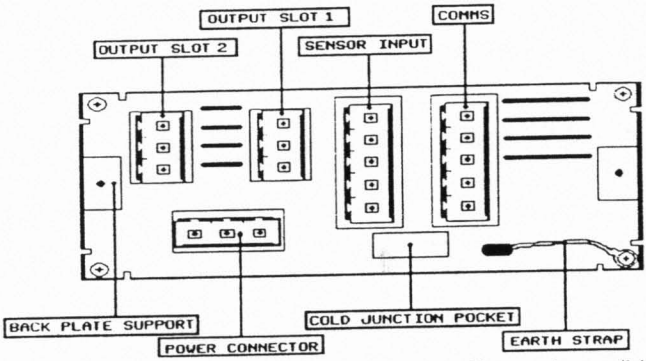

A schematic of the unit showing internal power supplies and possible options is shown below

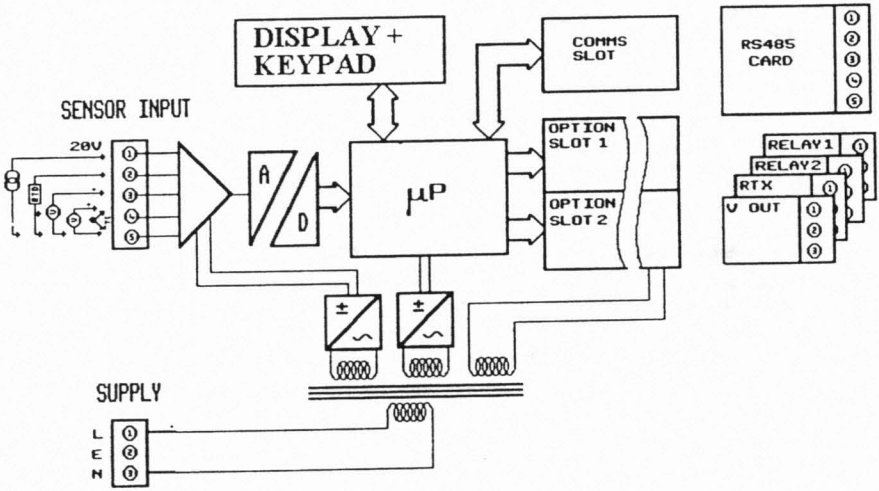

2.0 UNPACKING

Please inspect the instrument carefully for signs of shipping damage. The packaging has been designed to afford maximum protection, however, we can not guarantee that undue mishandling will not have damaged the instrument. In the case of this unlikely event, please contact your supplier immediately and retain the packaging for our subsequent inspection.

Check that the following items are included with the instrument. Note that if there are output options included, there will be additional items.

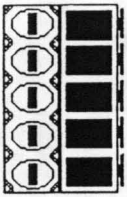

SENSOR INPUT SOCKET

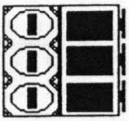

POWER SOCKET

BACKPLATE AND FIXING SCREWS

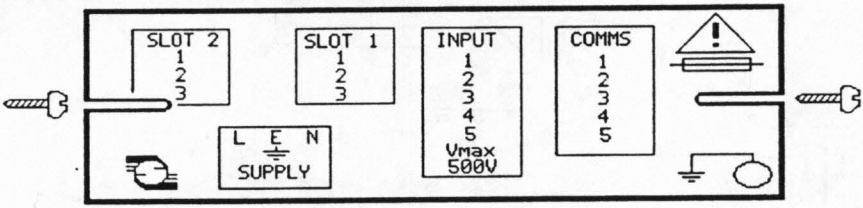

3.0 WIRING

This section describes the wiring of the instrument for Power Supply, Input Sensor and any output optains that may be fitted. All connections are made to three and five way sockets which are removable for ease of wiring.

3.1 POWER SUPPLY

The power supply setting is indicated on the label on the top of the instrument case. **Ensure that this is correct for the voltage that is to be connected.** If there is a difference, refer to Appendix A for details of power supply adjustment. Note that the power connection socket has had polarisation keys fitted to prevent insertion into any other plug at the rear of the unit. The connection is made as follows. Ensure that no bare wire protrudes from the rear of the power connector.

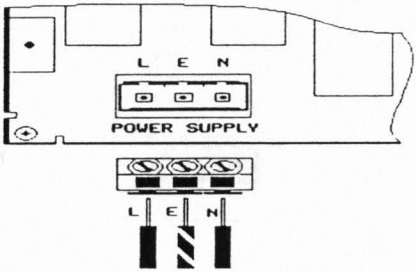

3.2 WIRING PRECAUTIONS

The unit can accept a variety of sensor inputs, some of which produce very small voltages. Therefore it is advisable to adhere to the following rules of good installation pratice.

- Do not install close to switchgear, electromagnetic starters, contactors, power units or motors.
- Do not have power or control wiring in the same loom as sensor wires.
- Check power supply voltage is the same as printed on the label attached to the unit.
- Check wires (especially the power supply voltage wires) are not loose before switching on the unit.
- Use screened cable for sensor wiring with the screen earthed at one end only.
- Follow the wiring instructions in this manual

Installation should be undertaken in accordance with the relevent sections of BS6739 - British Standards code of practice for " Instrumentation in Process Control Systems : Installation design and practice".

3.3 SENSOR CONNECTIONS

All sensor connections are made via the five way socket at the rear of the unit.

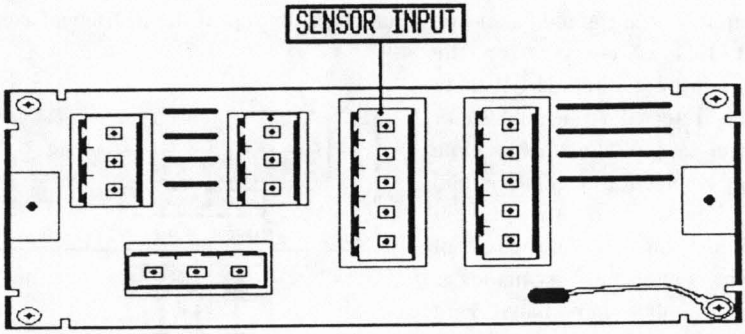

All sensor connections are summarised in the diagram below.

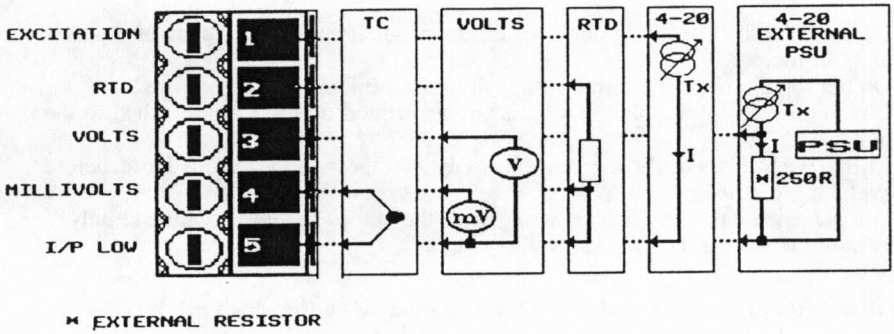

3.3.1 DC VOLTAGE INPUTS

The unit has two individual voltage inputs. One supports millivolt inputs (up to 100mV), and the other, voltage inputs up to 10 volts.

If the voltage input to be measured is to be no greater than 100mV it is connected to the millivolts input. If the signal is less than 10 volts but greater than 100mV, it is connected to the Voltage input. Any voltages greater then 10 volts may still be measured, but must be divided down first. Each of these cases is discussed in more detail below.

3.3.1.1 MILLIVOLTS INPUT

This input accepts signals up to +/-100mV in normal operation. The input circuitry is overload protected to 250V. The signal source must be connected to pins 4 and 5 as shown opposite.

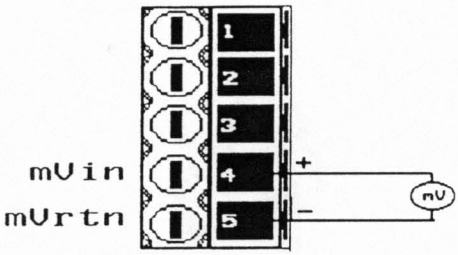

3.3.1.2 VOLTAGE INPUT

This input pin can take voltages up to 10 volts. The input circuitry is overload protected to 250V. The signal should be connected between pins 3 and 5 as indicated opposite.

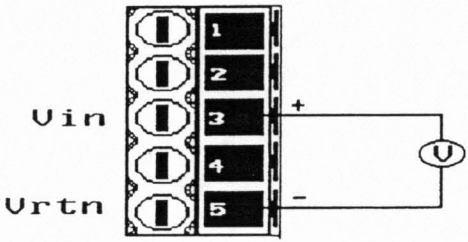

3.3.1.3 VOLTAGES GREATER THAN 10 VOLTS

In order for these to be measured correctly, it is necessary to connect some simple external circuitry outside the unit to divide down the voltage to a nominal maximum of 10 volts. This is done using a resistor divider chain as shown in the diagram below. The choice of resistors are given as the nearest preferred values to those calculated in the equations for R1 and R2 below. It is possible to correct for any errors in the divide down chain by making R2 adjustable, or correct by adjustment of the scale range. Care must be taken to insulate any high voltages to protect from electric shocks or damage to any other equipment.

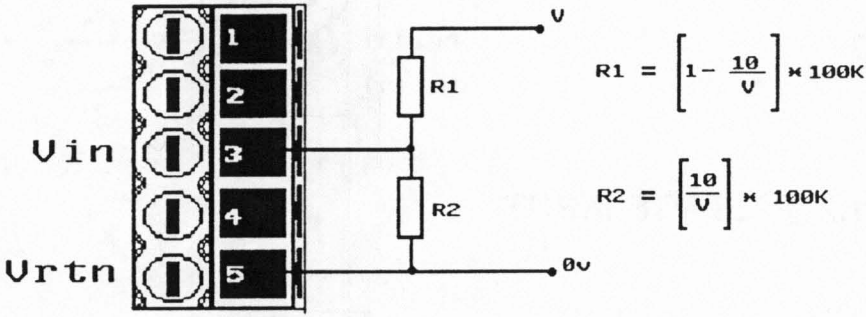

3.3.2 CURRENT INPUTS

There are two types of current measurement possible, the first type measures the current of an external loop, that is, a current that has been generated from an external power supply, or from another instrument. The second type measures current generated from the instrument itself, from its own 20v excitation supply. Before connecting up a current input it is obviously important to establish which one of these two types apply.

3.3.2.1 CURRENT MEASUREMENT OF AN EXTERNALLY GENERATED LOOP

In order to measure the current in an externally generated loop, it is necessary to insert a resistor into the loop and measure the voltage dropped. For a 4-20 mA loop the 1-5 volt range should be used. The diagram opposite shows the necessary connections.

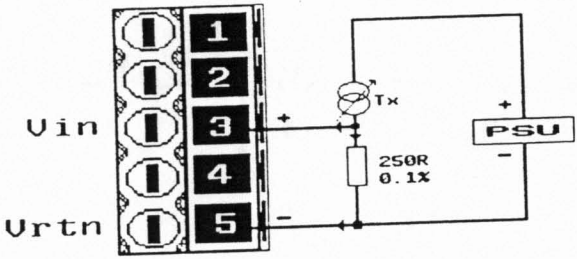

3.3.2.2 CURRENT MEASUREMENT OF AN INTERNALLY GENERATED LOOP

The instrument has an excitation supply which can be used for generating a current loop. If this is used, the current loop is connected up in the following way. Note that the unit current input has an internal impedance of 50 ohms.

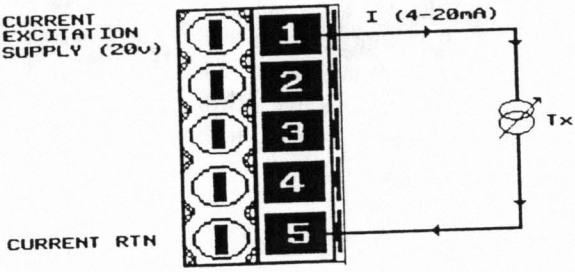

3.3.3 THERMOCOUPLE INPUTS

Thermocouples are simply connected to the millivolt input as shown below. The cold junction compensation is performed by the integral sensor at the rear of the unit or by a programmable cold junction value. For best accuracy, it is important that the rear plate is fitted to prevent draughts causing temperature differences between the cold junction sensor and the thermocouple connection with the device.

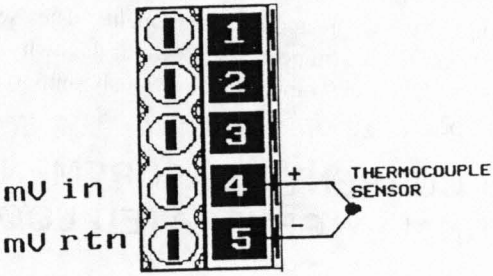

3.3.4 Pt100 RESISTANCE TEMPERATURE DETECTORS (RTDs)

These detectors are for platinum resistance inputs (Pt100) to BS1904 or DIN 43760 three wire. RTDs should be connected using three identical wires in order that measurement errors due to lead wire resistances can be eliminated. The connections should be made as shown in the diagram opposite.

If it is necessary to use a two wire sensor, then it should be connected across pins 2 and 4, with a link added between pins 4 and 5. It must be noted, however, that this configuration will suffer from inaccuracies due to the total series resistance of the wiring.

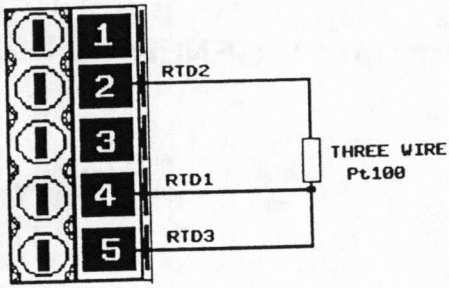

3.3.5 TRANSDUCER BRIDGE INPUT

A transducer bridge requires two sets of connections. A power supply and bridge output. The bridge output is treated as a millivolts signal and connected between pins 4 and 5 as in the diagram below.

Note that the power supply could be from the units bridge excitation output option or an external power supply.

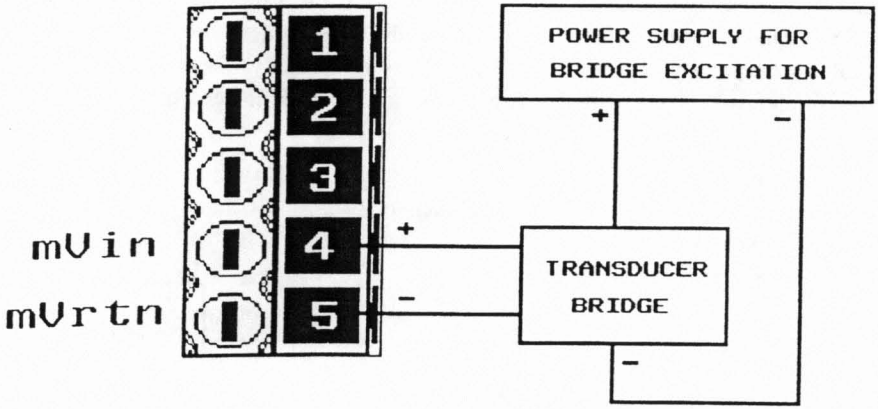

3.4 WIRING THE OUTPUT OPTIONS

This section applies to optional outputs fitted to the unit. If any options are to be retrofitted, see Appendix H for installation details.

3.4.1 RELAY OUTPUTS, options 1 and 2

There are two types of relay outputs available, Dual relay and Change-Over relay. The dual relay board has two independent contacts sharing the same common. The Change-Over relay has a single contact with a Normally Open and Normally Closed output available. The power-off state of the Dual Relay is normally closed, but may be changed, if required, by modifying hardware links on the board. See Appendix J for details.

All power-on states may be manipulated in software and is dealt with in the alarm programming section. If the relay is to switch inductive loads, the contact should be suppressed as shown below.

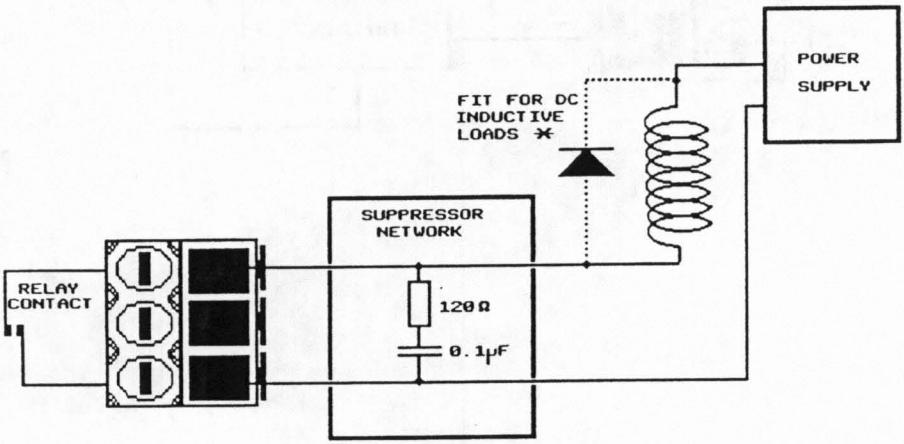

It is recommended that a proprietary suppressor network is fitted as close as possible to the inductive load. DC inductive loads should also have a reverse biased diode connected as shown.

The contact states for both these types of relays are summarised in the table below.

	ALARM OPTION	POWER OFF	POWER ON	
			NO ALARM	IN ALARM
	NON INV	1:3 CLOSED 2:3 OPEN	1:3 CLOSED 2:3 OPEN	1:3 OPEN 2:3 CLOSED
	INV	1:3 CLOSED 2:3 OPEN	1:3 OPEN 2:3 CLOSED	1:3 CLOSED 2:3 OPEN
	NON INV	1:3 CLOSED 2:3 CLOSED	1:3 CLOSED 2:3 CLOSED	1:3 OPEN 2:3 OPEN
	INV	1:3 CLOSED 2:3 CLOSED	1:3 OPEN 2:3 OPEN	1:3 CLOSED 2:3 CLOSED

If the current to be switched is very low (<100mA) the varistors on the relay board may need to be removed. See Appendix J for details.

3.4.2 Current Output (Retransmission), option 3

The Current output board can support current loops generated from an external power supply, or generate a loop source from the unit itself. Both of these cases are shown in the diagram below.

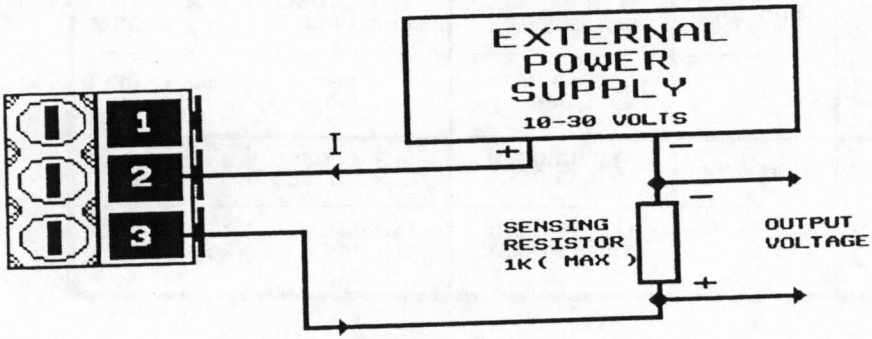

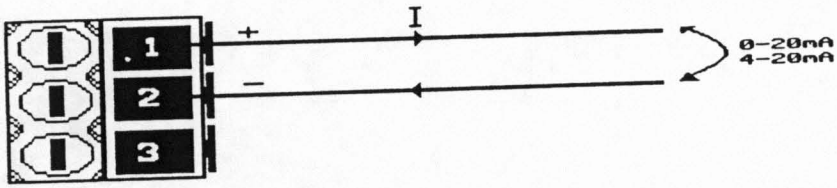

Note : Connecting directly between pins 1 and 3 may cause damage to the board.

The instrument may be used as a voltage output by connecting a suitable resistor between pins 1 and 2.

For example by placing a 250 ohm resistor across pins 1 and 2, and setting the output board to 4-20mA the voltage output will produce a voltage between 1 and 5 volts.

3.4.3 Voltage Output (Bridge Excitation), option 4

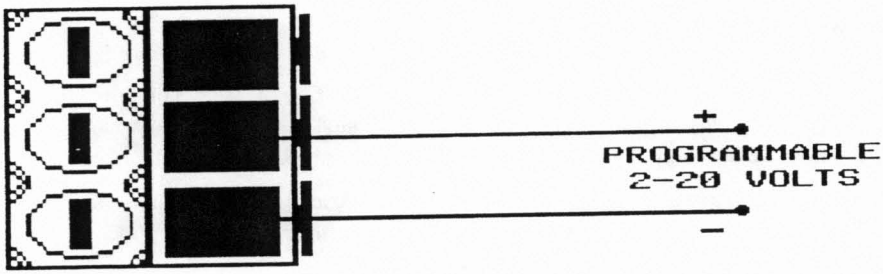

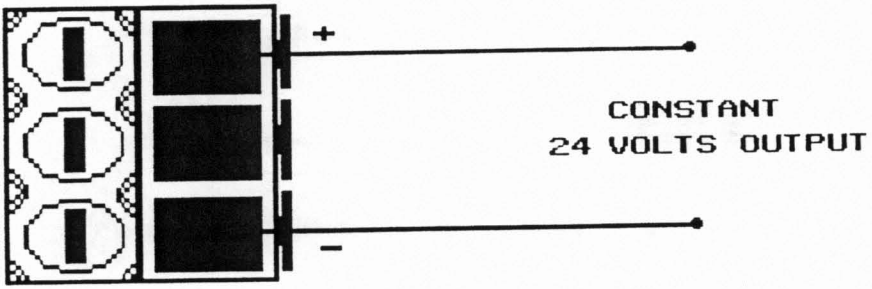

There are two options. Either a programmable 2-20 volt output or a fixed 24 volt output. The connections for both cases are shown below.

3.5 COMMS BOARD

This section explains how the instrument may be connected to a Host computer, either individually or as part of a multidrop network. Although a Personal Computer is shown as the host device, any computer capable of generating RS485 may be used.

The electrical communications standard, RS485 is used instead of the commonly available RS232 as its robustness is more suitable for process instrumentation.

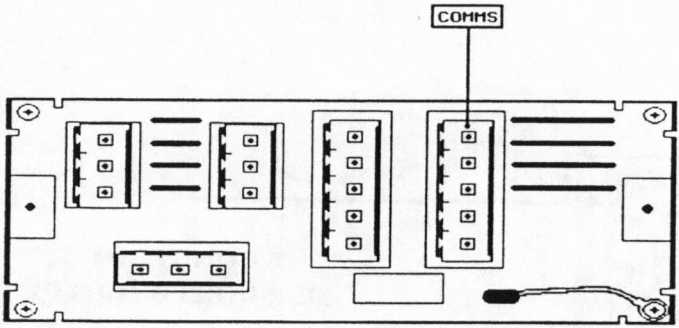

The Comms board is fitted in its own dedicated slot accessible from the rear of the instrument as identified below.

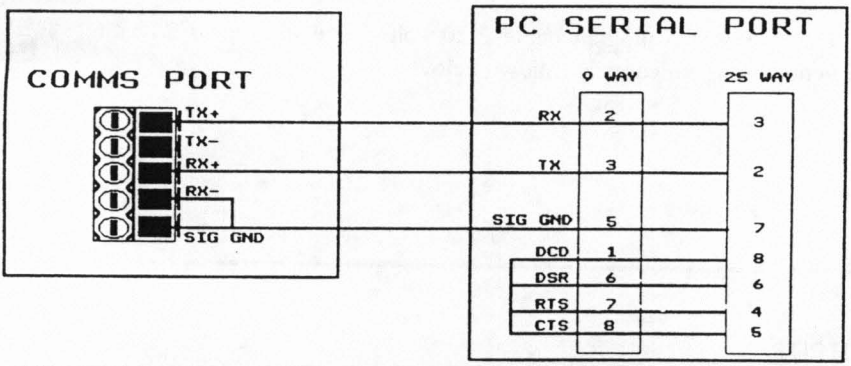

Although RS485 is the recommended interface, RS232 has been found to operate satisfactorily on some PCs over short distances. This is not a recommended arrangement, but if required for evaluation, should be wired as follows.

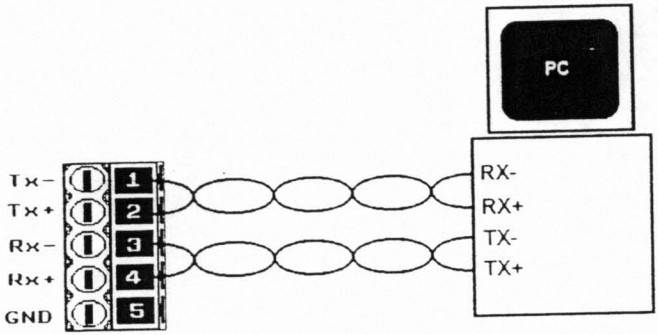

3.5.1 BASIC CONNECTIONS

The diagram below shows the basic connections between the instrument and a Host PC. The Tx and Rx signals are both differential, therefore they should be twisted for best operation over long distances.

For multidrop operation, the instruments should be connected as shown below. As

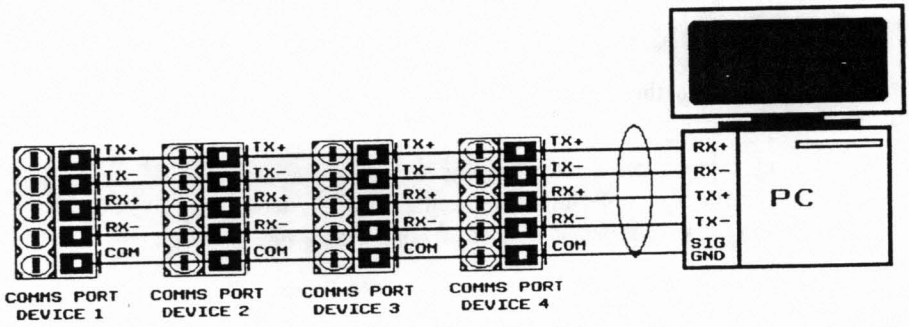

only one instrument can transmit at a time, it is possible to connect all of the transmit lines together. This does depend upon each unit being given a unique *address* or device number, a subject which is dealt with in the programming section of this manual. It may be necessary to screen the communications wiring if installed in a

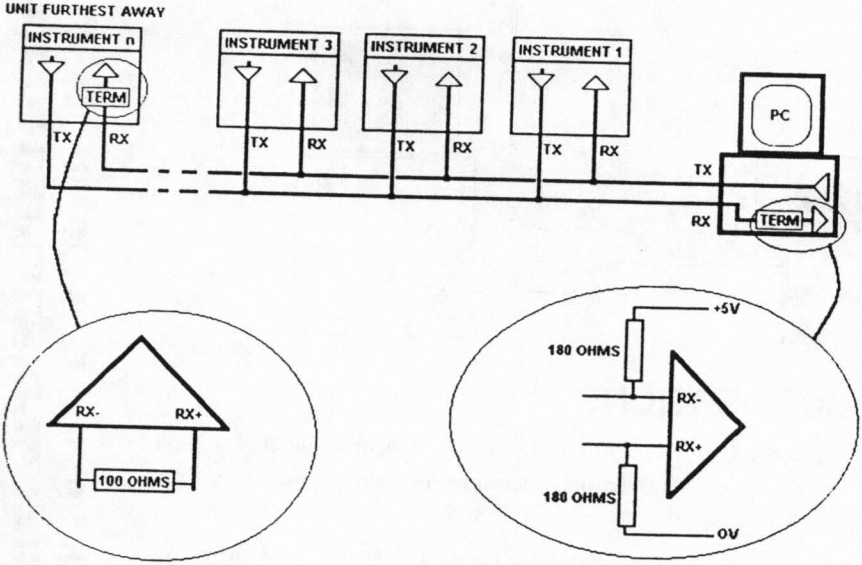

noisy electrical environment. The screen should be grounded at one point only.

3.5.2 LINE TERMINATION

Termination resistors should be put on the receive inputs of the Host PC and the instrument furthest away from it. This is shown schematically below.

The instrument has a 100 ohm termination on the comms board which may be connected in-circuit by moving a user selectable link. The normal position, when the unit leaves the factory is with the resistor disconnected. See Appendix I for details.

There is more to the termination at the Host PC receiver. The additional resistors

3.5.3 CONNECTING MORE THAN 32 UNITS

RS485 has a drive limitation of 32 receivers. if additional instruments are required (there is a logical maximum of 99 units) it is necessary to buffer the Host PC transmitter as shown in the diagram below.

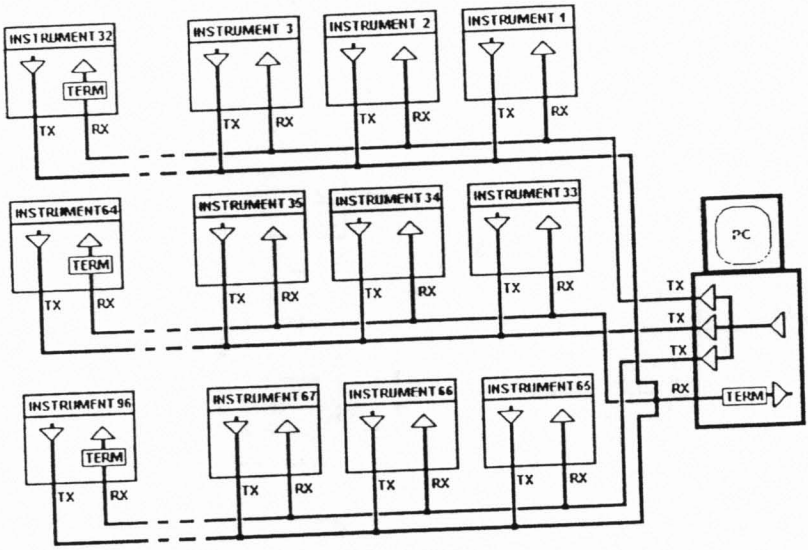

3.5.4 GROUNDING PROBLEMS

Each instrument has an internal link which connects the comms 0v to unit ground. If this causes any problems, it may be removed. See Appendix 1 for the location of the ground link.

Warning; do not remove the Earth strap from the instrument as this could potentially leave the instrument in an unsafe condition.

4.0 PROGRAMMING THE INSTRUMENT

The unit is a microprocessor based instrument wish enables it to satisfy a wide variety of applications through re-programming. The diagram below shows schematically, the operation of the instrument.

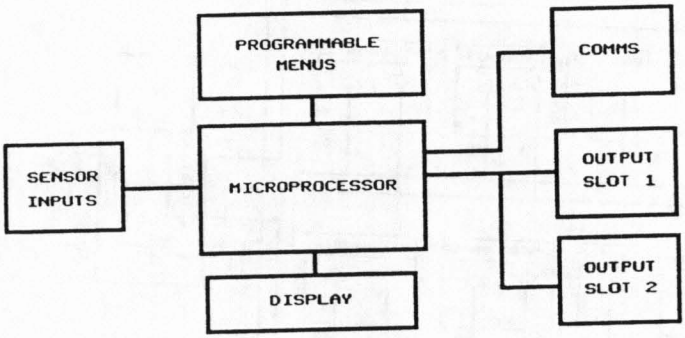

The programming of the instrument is central to its operation, effecting the way the inputs are processed, how the outputs are handled and what is displayed.

This section is divided into two parts, the first is a tutorial guide to show how to use the programming menus, the second documents the complete menu contents.

4.1 PROGRAMMING TUTORIAL GUIDE

Before starting with the Tutorial, it is useful to understand that the unit has three operating modes. These are :-

DISPLAY PROCESS VARIABLE MODE

MENU MODE

EDIT MODE

THE DISPLAY PROCESS VARIABLE MODE is the principal mode of operation. From here, the Process Variable is displayed and all other modes are accessed. The unit will always time-out back to the mode from any other mode of operation.

THE MENU MODE gives the user access to the programmable parameters within the unit. It is called a Menu Mode because the parameters are arranged in lists according to their type.

THE EDIT MODE is entered into from the Menu Mode and allows the user to inspect or modify a parameter value.

4.1.1 KEY DEFINITIONS

All programming is done using the three front panel keys. How these keys are used to program the instrument is shown in this tutorial. The functions of the keys are summarised as follows. The shaded symbols indicate the keys to press. Two shaded keys indicate that the keys should pressed simultaneously.

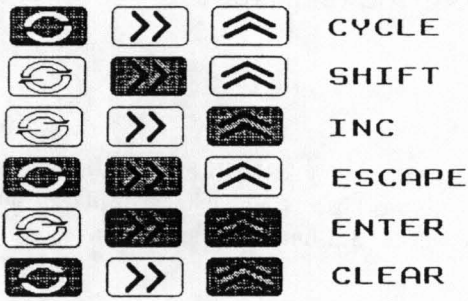

4.1.2 GETTING INTO MENU MODE

The Menu mode is accessed from the Display PV mode by pressing the following sequence of keys.

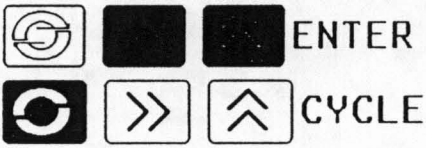

The display will now show SETPt. In order to understand what this means, the following diagram shows where we are within the basic or Root menu structure.

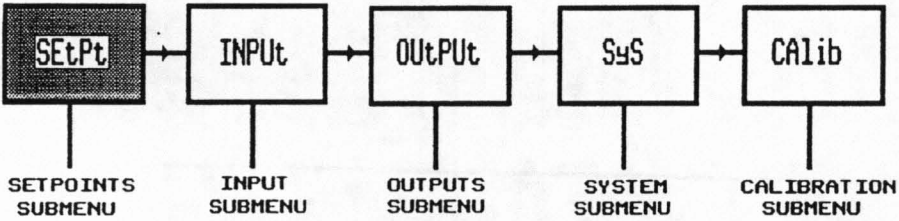

4.1.2.1 MOVING AROUND THE MENU

We can browse through the other items in the Root menu by pressing

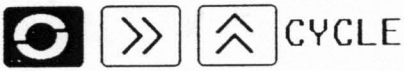

Subsequent presses of Cycle moves the menu position from right to left on the previous diagram of the root menu. Notice that after reaching CALIB, the menu position wraps around to the start. This principle of menu operation is applied throughout the system.

4.1.2.2 GETTING INTO A SUBMENU

Up to now we have simply moved within the Root menu, in order to get into a submenu, we must first cycle around the Root menu until the required submenu is displayed.

For the purposes of this tutorial press the CYCLE key until InPut is displayed.

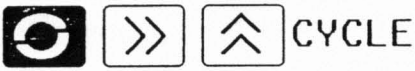

In order to get into the INPUT menu simply press the SHIFT key.

SENSor will now be displayed; we are now in the Input submenu. The diagram below shows our position in relation to other items in the menu.

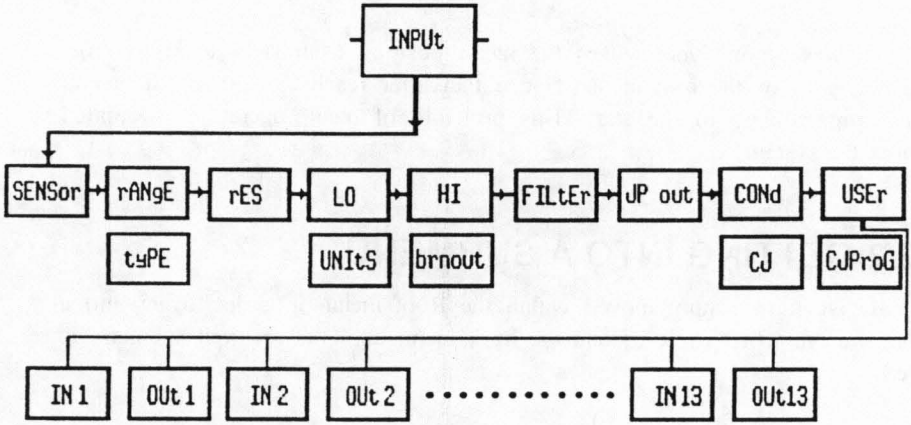

As before, pressing the CYCLE moves the menu position from left to right, wrapping around at the end. Do not worry if the contents of the menu as shown above is not exactly as you find; the unit alters items in the menu list depending upon settings made.

4.1.3 EDITING A PARAMETER

Although the items displayed in the menu can either be submenus or parameters, most of the items in the Inputs menu are parameters. This means that they can be edited.

Press the CYCLE key until **SENSor** is displayed,

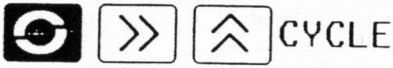

and then press SHIFT.

We are now in EDIT mode. This mode is indicated by a flashing display. The display shows the contents of the parameter being edited. The flashing entry is most likely to be **currnt**. This means that the Input sensor type was previously set to monitor current inputs.

This item is changed by pressing the INC key.

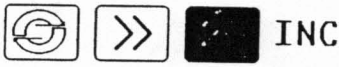

The choice of options available will be found to be as follows:-

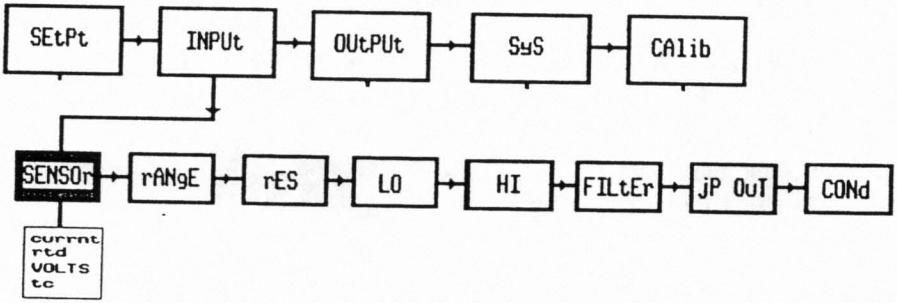

INCrement the edit options around until **Volts** is displayed flashing.

Note that whilst the display is flashing, the option on the display has not been saved to memory.

To select an option, the ENTER key sequence is used.

Now press ENTER.

The display will be seen to stop flashing momentarily before returning to Menu mode. Instead of returning back to the **SENSor** entry, **rANgE** will now be displayed. The system has automatically stepped on to the next entry to speed the process of programming.

This method of editing parameters is repeated broadly throughout the menu structure, with the exception of programming number fields which will be dealt with next.

The method of editing a field is a bit different, though as easy as for any other entry. As before, we will see it through an example.

Cycle around the Inputs menu until **Hi** is displayed.

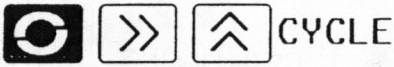

This is the engineering high range value, although its function is unimportant in the tutorial, it simply provides a numeric field to edit.

As before pressing SHIFT takes us into the edit mode.

The value on the display will have its most significant digit flashing and represents the value previously entered for the engineering units high range.

As before, the INC key modifies the editable value, but this time, this will only be the digit flashing. This digit is said to be under the edit cursor.

To move the edit cursor, press the SHIFT key.

The edit cursor moves one digit to the right. If the SHIFT key is repeatedly pressed, the edit cursor will be seen to wrap around to the most significant digit once more.

Therefore it can be seen how a number may be programmed in this field by selective use of the INC and SHIFT keys. We could enter the edited value as done in the previous example, but for the purposes of this tutorial we shall abandon the edit.

This is done using the ESCAPE key sequence.

Pressing this returns us to the MENU mode, showing **FiltEr**, the next item in the Input menu.

We could go on and program other items within this or other menus using the same principles as we have done in the previous examples. Instead, we shall return to the Root menu, and then back to the DISPLAY PV mode.

4.1.4 RETURNING FROM SUBMENUS

It has been shown that the method of getting into a submenu is pressing the SHIFT key on a submenu item. The reverse operation is to press the ESCAPE key.

This may be done anywhere in a menu. Pressing the ESCAPE key from our current position in the Inputs menu takes us back to the Root menu.

OUtPUt will now be displayed, as the menu position has automatically stepped on to the menu item.

The Root menu, as its name suggests is not a submenu. Pressing the ESCAPE key sequence whilst in the Root menu will take the user out of MENU mode and into the DISPLAY PV mode. Thus the monitored process variable will be shown on the display.

Note that escaping to DISPLAY PV mode saves all programmed data to non-volatile memory, retaining it during switch off.

4.2 THE MENUS

The previous section explained how to get into Program mode, to move around the menus and how to edit. This section details the contents of the menus and explains how to program the unit for your own particular application.

As described before, Program mode is entered by pressing ENTER then CYCLE from the display process variable display. This takes the system into the Root menu. The Root menu is divided into five submenus; SETPOINTS, INPUTS, OUTPUTS, SYSTEM and CALIBRATION.

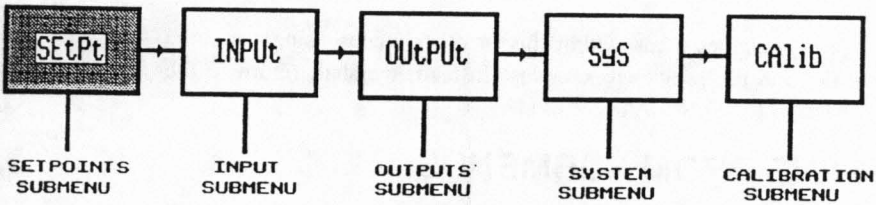

Note: If there are analog output options (Current output or Voltage output) in both output slot positions there will not be any setpoints available and the SETPOINT submenu will be removed from the Root menu.

4.2.1 THE SETP (SETPOINTS) Menu

This submenu is provided as a quick means of modifying setpoints. Only setpoint values are available to changed. The availability of the setpoints depends upon the output options fitted. The logic directing this is discussed in detail in section 4.2.3, under Output submenu. With this in mind, it should be taken that any or all of the setpoints (1 to 4) could be unavailable and therefore be removed from the submenu. If all setpoints are unavailable then the entire submenu is occulted.

The submenu is represented as follows:-

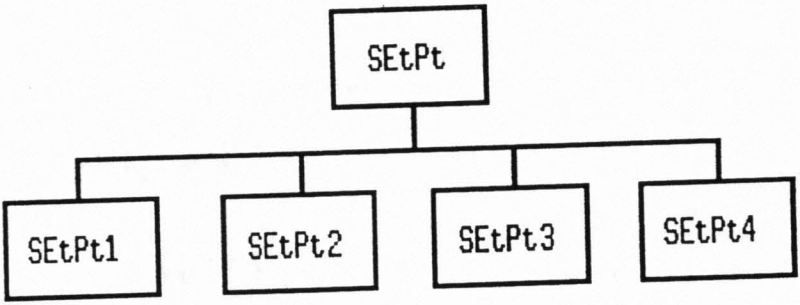

In each case, the editable value is the setpoint in engineering units. The number of decimal places for this field is defined by **rES** in the Inputs menu, see 4.2.2.5.

Default value is **zero.**

4.2.2 The INPUt submenu

This submenu is used to program all the characteristics of the input sensor and any signal conditioning that may be required. The selection of an option in the list may affect items further down. Therefore, during programming, the user should start at the top of the menu and work down, to avoid setting an option which may later become obsolete. For instance, if a temperature sensor is selected, then there is no requirement to select the engineering range. The structure of the Input menu is represented in the following diagram.

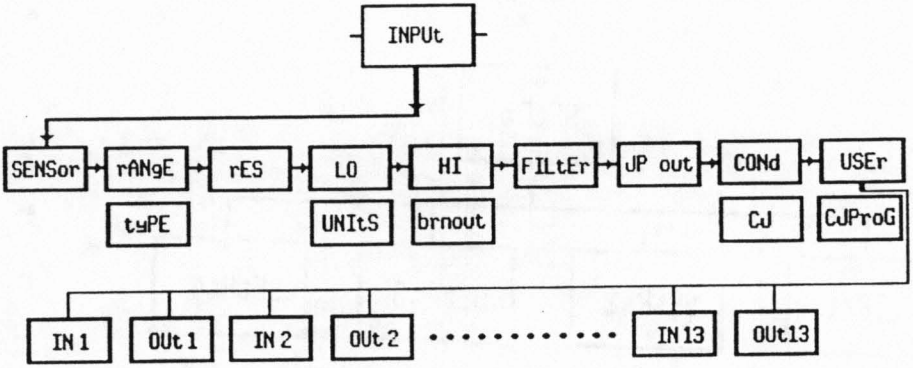

4.2.2.1 SENSor (Type of sensor connected)

This parameter defines the type of electrical sensor connected.There are four options.

currnt	(Current inputs, internally generated loop).
tc	(Thermocouple input).
VoltS	(Voltage input, including millivolts).
rtd	(Resistance thermometer)

default setting: **currnt**

4.2.2.2 rANgE (electrical range for voltage or current inputs)

The Range parameter will only be available if the sensor option has been set to either current or voltage. The options available will vary between these two settings.

4.2.2.2.1 rANgE [SENSor=currnt]

If the sensor type has been set to current, the following options are available.

4-20 (Internally generated 4-20mA)

0-20 (Internally generated 0-20mA)

0-10 (Internally generated 0-10mA)

default setting: **4-20**.

4.2.2.2.2 rANgE [SENSor=VOLtS]

If the sensor type has been set to voltage, the following options are available.

0.100	(100mV on the millivolt input)
1	(1 Volt on the voltage input)
1-5	(1 to 5 volts on the voltage input)
10	(10 volts on the voltage input)

default setting: **0.100**

4.2.2.3 SENSOr (Type of thermocouple)

This menu option is only available if a thermocouple has been selected as sensor type. This option allows the user to set the thermocouple type. The options are:-

CA	(K type thermocouple)
J	(J type thermocouple)
t	(T type thermocouple)
r	(R type thermocouple)
S	(S type thermocouple)
E	(E type thermocouple)
F	(F type thermocouple)
n	(N type thermocouple)
b	(B type thermocouple)

Default setting: **CA**.

4.2.2.4 UnitS (Temperature sensor units)

This item is only available if a temperature sensor has been selected, that is, either a thermocouple or an RTD. The two options are:-

dEg C (Degrees Centigrade)

dEg F (Degrees Fahrenheit)

Switching between these two has the effect of changing the engineering range between Degrees centegrade and Degrees Fahrenheit.

Default setting: **dEg C.**

4.2.2.5 rES (Engineering units display resolution)

This option defines the number of decimal places displayed for the process variable. There are four options:

8888	(No places of decimal (integer value)
888.8	(One place of decimal)
88.88	(Two places of decimal)
8.888	(Three places of decimal)

Note that the Low and High engineering range adopts this resolution, as do the setpoints, so consideration needs to be given to appropriate resolution for the required application. It is advised that the number of decimal places is set before the engineering range is programmed. There are five digits allocated for all engineering values, so the number of significant figures must fit within this field.

If there are more significant digits than what can be displayed, the number will be right justified.

default setting: **888.8** (One place of decimal)

4.2.2.6 CJ (Cold Junction Select)

This is only shown if thermocouple has been selected as input type. This entry provides choice of cold juction compensation between a internal thermistor measuring the actual input terminal temperature or a set programmable temperature.

iNtErN	(Internally measured input terminal temperature)
PrOG	(Programmable Cold junction)

default setting: **iNtErN**

4.2.2.7 PrOGCJ (Programmable Cold Junction)

This is shown if CJ has been set to PrOG and contains the value with which the thermocouple calculation will use as cold junction. The value is in engineering units; Degrees C or Degrees F.

Default setting: **0.0**

4.2.2.8 LO and HI (Engineering range)

LO and HI are only available for non-temperature sensors and are used to define the user engineering range. This range applies to low and high electrical inputs being monitored by the unit. For example, if the electrical input has been set to Volts, on the 100mV range, and it is required that the display value be 0.0 at 0mV input and read 50.0 at 100mV, LO and HI are set to the following values: LO = 0.0; HI = 50.0.

The display value will increase linearly from 0.0 to 50.0 as the millivolts increase from 0 to 100. Similarly as the millivolts reduce from 0 to -100 the display falls from

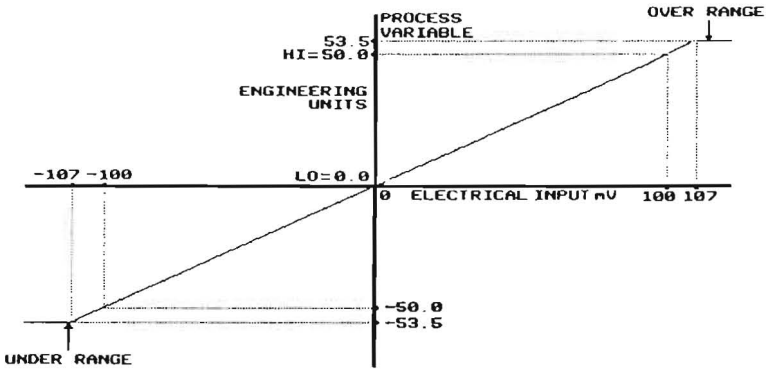

0.0 to -50.0. This relationship is shown on the following diagram.

On all ranges, a 7% overhead is allowed on the scale before the unit detects an out-of-range signal. If the input signal is out of range at the positive end of the scale, OVEr is displayed instead of the Process Variable. If out-of-range at the negative end, Under is displayed.

Note that it is quite acceptable to have a reverse acting engineering range, where LO will be greater than HI.This method of setting the engineering range may also be used for removing gain or offset errors from the system being measured.

Note that the maximum value that can be entered in is 64000

default settings: **LO: 0.0;HI: 100.0**

4.2.2.9 brnout (Temperature Sensor burnout)

Burnout enables the user to select up-scale (Hi) or down-scale (Lo) burnout condition. This is available for thermocouple or RTD sensors only, and effects the operation of all alarms and output options. When a temperature sensor is detected to be open circuit, the burnout comes into operation, forcing the Process Variable up-scale or down-scale. **burn** is shown on the display in place of the Process Variable display.

The options are

Hi (High scale burnout)

Lo (Low scale burnout)

default setting: **Hi**

The factors which can cause a burnout error are any of the following :-

Thermocouple open circuit

Cold junction thermistor temperature out of bounds

Cold junction thermistor electrical fault

Any RTD wire becoming open circuit

4.2.2.10 FiltEr (Input filtering or smoothing)

If an input is particularly noisy, it is possible to filter out noise using this programmable feature. There are eight filter values which may be selected. These filter factors represent the time it would take a step change in an input value to reach approximately 63% of its final value.

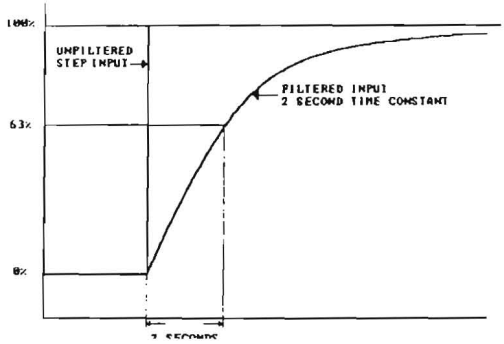

The following filter factors are available:

nonE	(Filtering switched off)
0.5 SEC	(Filter Factor 0.5 seconds)
1 SEC	(Filter Factor 1 second)
2 SEC	(Filter Factor 2 seconds)
4 SEC	(Filter Factor 4 seconds)
8 SEC	(Filter Factor 8 seconds)
16 SEC	(Filter Factor 16 seconds)
32 SEC	(Filter Factor 32 seconds)

default setting: **2 SEC** Also see jump out in section 4.2.2.11

4.2.2.11 JP out (Filter jump out)

This sets the change in input value, expressed as a percentage of full scale, below which the filter operates and above which the filter is inoperable. This enables the indicator to respond quickly to large changes, whilst filtering smaller noisy signals.

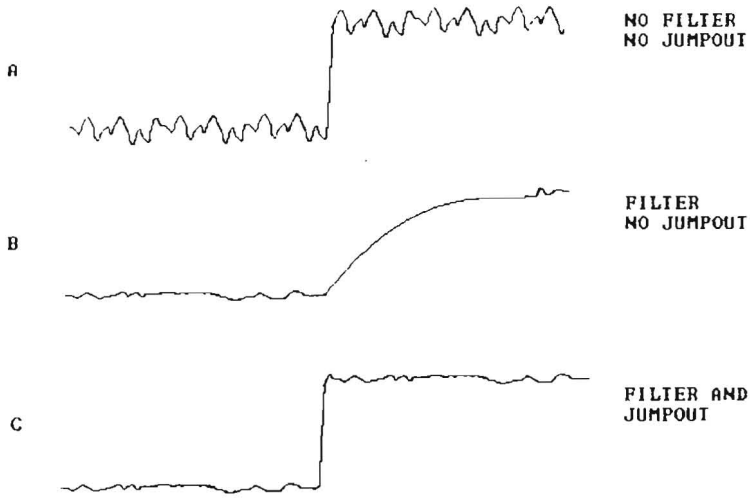

The following options are available:

nonE	(No jump out, filter in operation all of the time)
1 PEr	(Jump out band, 1% of engineering range)
5 PEr	(Jump out band, 5% of engineering range)
10 PEr	(Jump out band, 10% of engineering range)

Note that 1% of engineering range for thermocouples is 20 degrees and for RTDs is 10 degrees.

default setting: **1 PEr**

4.2.2.12 Cond (Input conditioning for Current and Voltage ranges)

This feature is available for Voltage and Current inputs only, and enables the user to specify one of the following input characteristics. This characteristic is then applied to the Raw input.

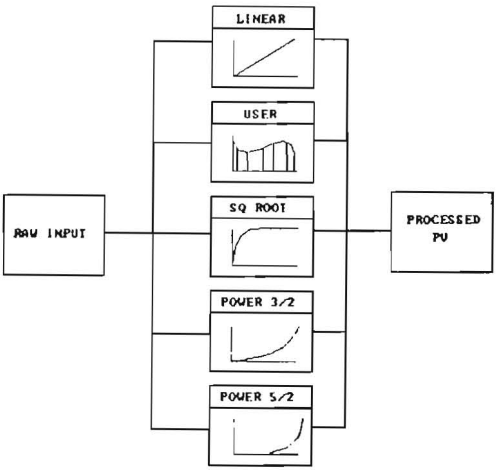

The five options are:

LinEAr	(Linear relationship, no conditioning)
USEr	(User defined characteristic. See 4.2.2.13)
S root	(Square root Law. See 4.2.2.14)
root 32	(Power 3/2. See 4.2.2.15)
root 52	(Power 5/2. See 4.2.2.15)

default setting: **LinEAr**

4.2.2.13 User linearisation

Selection of this option for **Cond** allows access to the User submenu. Within this menu, thirteen points may be programmed to relate electrical input to engineering value. These points are represented by IN and OUT entries within the menu, where IN are the electrical inputs and OUT the resultant engineering value. An example of a user linearisation utilising all thirteen points is shown below.

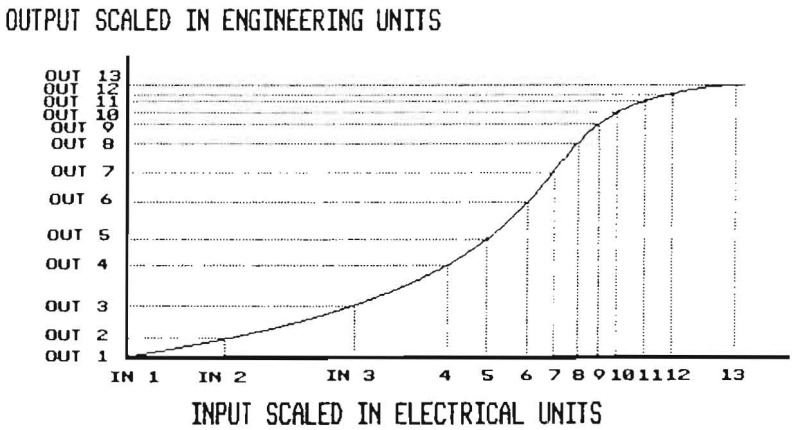

There are a few rules which should be followed when using this facility.

a) The HI and LO values for engineering range should have been set before any entry of data. Any engineering values entered should lie between HI and LO.

b) The entries for the electrical inputs should progressively increase. There is no such restriction on the engineering units.

c) If not all thirteen points are used, it is necessary to reproduce the values in the last entry in entry 13.

d) Any electrical input falling outside the bounds specified by the table will be regarded as out of bounds and under-range or over-range will be indicated instead of the Process Variable. If a small amount of valid signal over/under range is required, this must be built into the linearisation table.

4.2.2.14 Square Root.

When the Square root characteristic has been selected, the engineering range will still increase from LO to HI as the electrical input is increased, but the response will be a square root rather than Linear, see the diagram below.

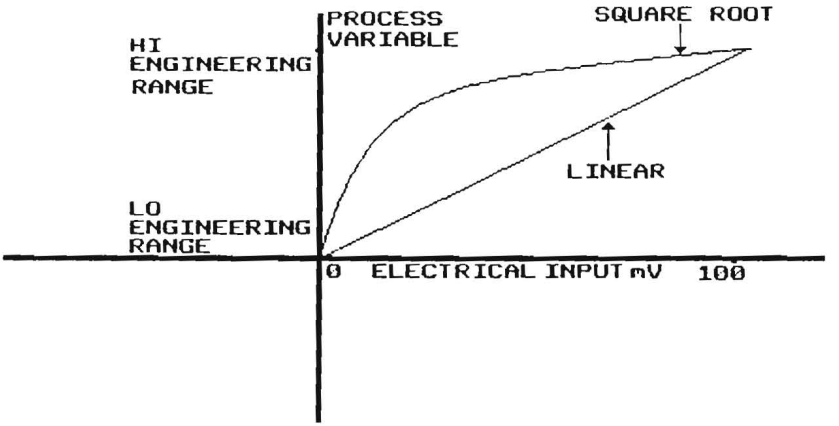

The bottom 1% of the range is made to reflect equivalent linear value (times 10) to avoid the near infinite gradient at zero. The Process Variable is set to Low engineering range for all negative electrical inputs.

4.2.2.15 POWER 3/2, 5/2 LAW

The root 3/2 and 5/2 characteristics are for specific applications. For example, calculation of Flow Rate from rectangular and 'V' notch weirs require these non-linear corrections. The operation of the characteristic is the same as for the square root except that the bottom 1% is not made linear. The response is as follows.

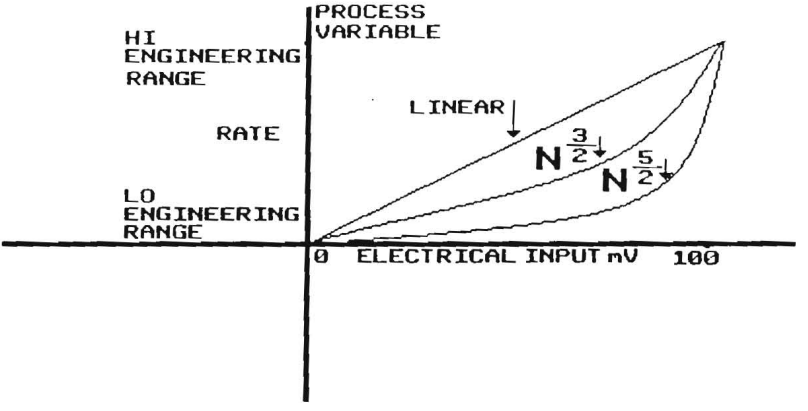

4.2.3 OUTPUT SUBMENU

There are two types of outputs, namely digital (relays) or analogue, which are available as options. Each of the two output slots can contain either of these options. The processor identifies which options are present on power-up and invokes the appropriate programming menus accordingly.

Entry into the outputs menu presents a list of submenus relating to the output cards fitted. The conditions determining the availability of submenus is summarised below.

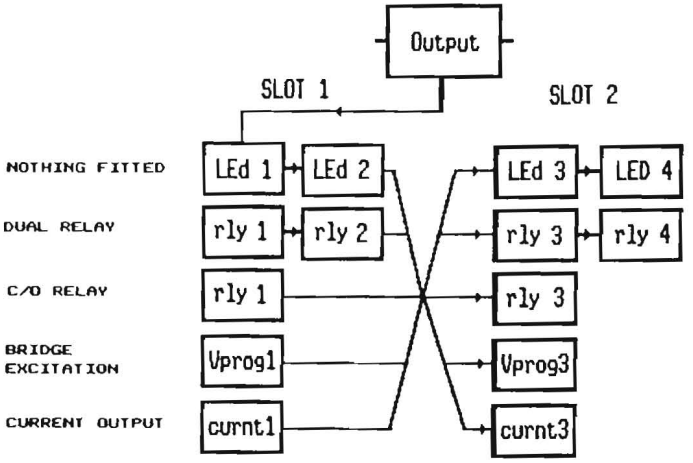

4.2.3.1 Relay alarms and LED alarms submenus

The submenus for the Relay and LED alarms are shown below.

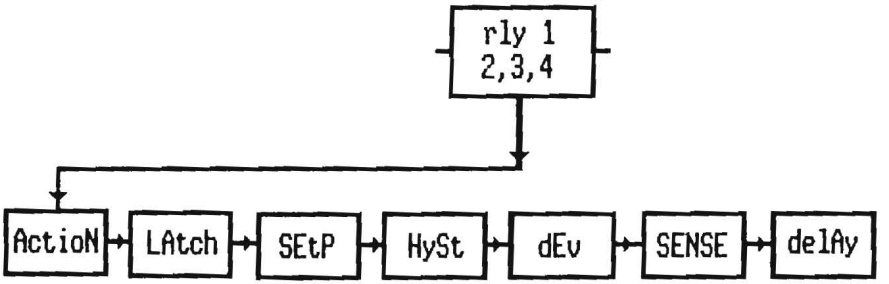

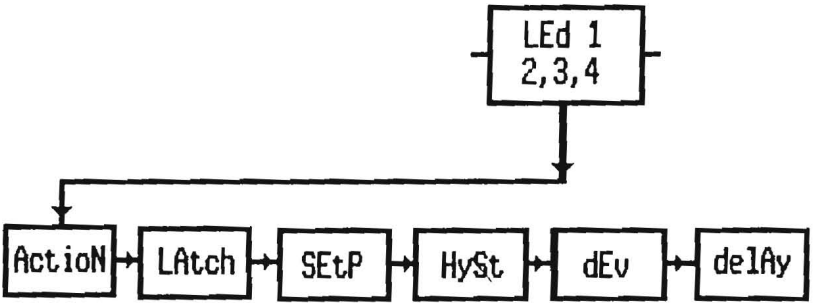

Note that the only difference in content between them, is there is no SENSE option in the LED submenu. This is because the SENSE option relates to the activation of a relay and is therefore irrelevant if no relay is fitted. Both types of alarms activate a discrete LED on the front panel of the instrument if triggered, although this is all a LED alarm does, hence its name.

4.2.3.1.1 ActIOn (Alarm action)

This programs how the alarm is to operate. The options are:

oFF (Alarm inactive)

Lo (Low alarm. Triggers when PV goes below setpoint)

Hi (High alarm. Triggers when PV goes above setpoint)

dEv (Deviation alarm. See Deviation band 4.2.3.1.5)

Default setting: oFF

4.2.3.1.2 LAtch (Latch enable for an alarm)

The options for this are:

FALSE (Latch disabled)

trUE (Latch enabled)

When Latch is enabled, the alarm remains set once triggered, even when the Process Variable has returned to a non alarm condition. A non-latching alarm is self-resetting when the alarm condition is removed.

Pressing CLEAR, from the Display Process Variable mode, clears a latched alarm if not in an alarm state.

Default setting: FALSE

4.2.3.1.3 SEtP (Alarm Setpoint)

This entry allows the user to program the setpoint value. This is entered in engineering units. This can also be set from the SEtP menu (see 4.2.1) which provides a quick means of adjusting setpoints whilst running.

Default setting: 0.0

4.2.3.1.4 HySt (Alarm hysteresis or dead band)

This enables the hysteresis or dead-band to be programmed. This is the difference between the points at which the alarm triggers and releases and is expressed as a percentage of engineering range. For high and low alarms, the alarm triggers exactly at setpoint and is removed at the hysteresis level away from the setpoint. See example based upon a high alarm below.

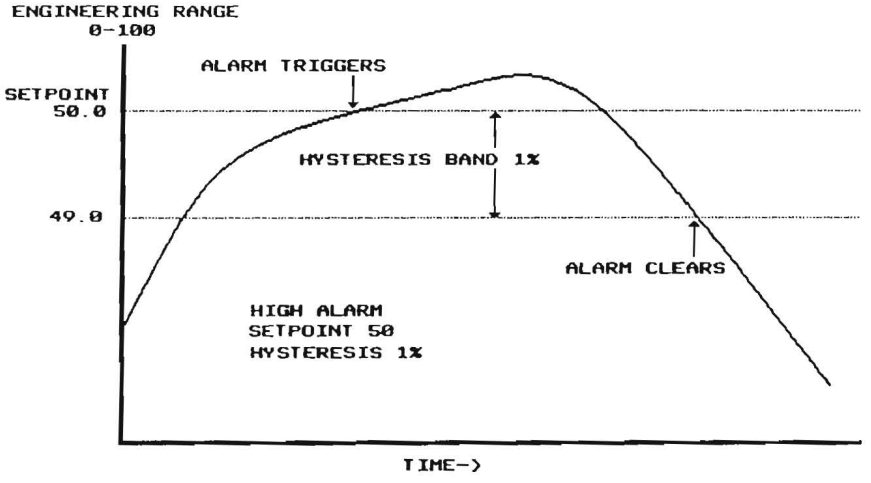

In the case of deviation alarms, the hysteresis is applied to each trigger point either side of the setpoint.

Note that for thermocouples, a 1% hysteresis band would be equal to 20 degrees Centigrade and 10 degrees Centigrade for an RTD.

default setting: **0.00**

4.2.3.1.5 DEv (Deviation band)

This option will only appear if the alarm action is set for deviation, and it signifies the amount, as a percentage of the engineering range that the input variable may vary before the alarm condition is activated. This is illustrated in the example below.

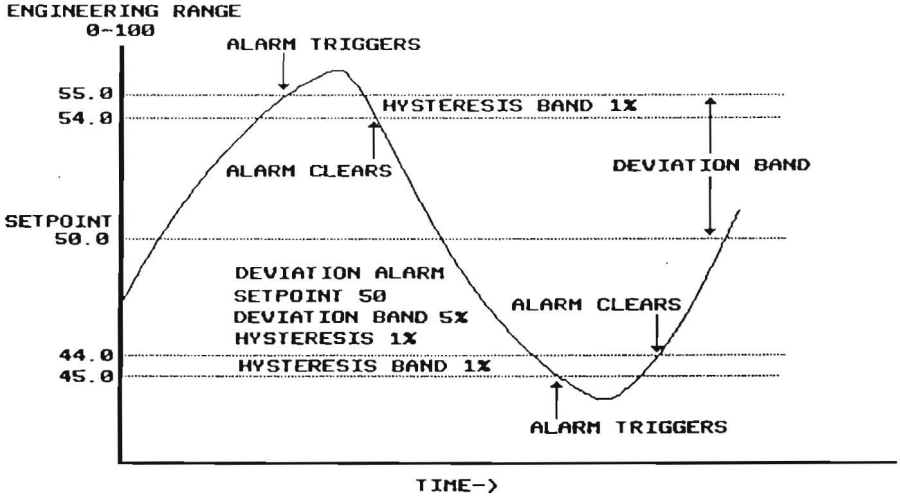

The deviation alarm creates two alarm trigger points; one above and one below the setpoint. The trigger points are equally distant from the setpoint. This is known as the deviation band and is a percentage engineering range.

Each of these trigger points may be regarded as an upper and lower setpoint, and as such the operation of the hysteresis is as on individual upper and lower setpoints.

Note that 1% deviation represents 20 degrees Centegrade for a thermocouple and 10 degrees Centegrade for an RTD.

default setting: **0.00**

4.2.3.1.6 SENSE (Invert activation of relay)

This option sets the sense of the relay, ie in the event of an alarm, is the relay to be energised or de-energised?

The options are:

noninv (energise relay on alarm, de-energise normally)

iNv (energise normally, de-energise relay on alarm)

This function is tied in with the fail safe requirements of the relay and its electrical configuration. The following summarises all options.

	ALARM OPTION	POWER OFF	POWER ON	
			NO ALARM	IN ALARM
	NON INV	1:3 CLOSED 2:3 OPEN	1:3 CLOSED 2:3 OPEN	1:3 OPEN 2:3 CLOSED
	INV	1:3 CLOSED 2:3 OPEN	1:3 OPEN 2:3 CLOSED	1:3 CLOSED 2:3 OPEN
	NON INV	1:3 CLOSED 2:3 CLOSED	1:3 CLOSED 2:3 CLOSED	1:3 OPEN 2:3 OPEN
	INV	1:3 CLOSED 2:3 CLOSED	1:3 OPEN 2:3 OPEN	1:3 CLOSED 2:3 CLOSED

Default setting: **noninv**

4.2.3.1.7 dElAy (Delay before activation of alarm)

This option allows a delay time to be programmed (in seconds) which must elapse between an alarm being detected and then indicated (and relay state changed).

The options are:

oFF	(No delay time)
1 SEC	(1 second delay)
2 SEC	(2 second delay)
5 SEC	(5 second delay)
10 SEC	(10 second delay)
15 SEC	(15 second delay)
20 SEC	(20 second delay)

If the alarm condition is removed during the delay period and then re-applied, the delay time starts again from the time the alarm condition re-occurs.

Default setting: **OFF**

4.2.3.2 curnt1(3) CURRENT OUTPUT (RETRANSMISSION) BOARD

The current retransmission board provides a range of current output options. If fitted, the following menu will be available from the Output menu.

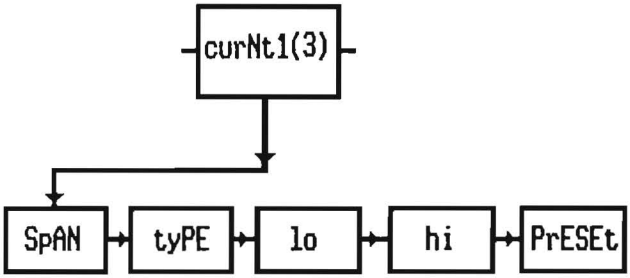

4.2.3.2.1 SPAN (Output current span)

Span is the current range at which the output board is to operate.

The options are:

4-20mA (Output current will vary from 4 - 20mA)

0-20mA (Output current will vary from 0 - 20mA)

0-10mA (Output current will vary from 0 - 10mA)

Default setting: **4-20**

4.2.3.2.2 tyPE (Type of output operation)

This determines the type of operation. The choices are either fixed programmable output or current retransmission based upon the process variable.

The options are:

rEtrAN (Retransmission of the input)

PrESEt (Constant preset output)

Default setting: **rEtrAN**