Series FAFM

Fan Inlet Air Flow Measuring Probe

Lightweight, Durable, & Easy to Install

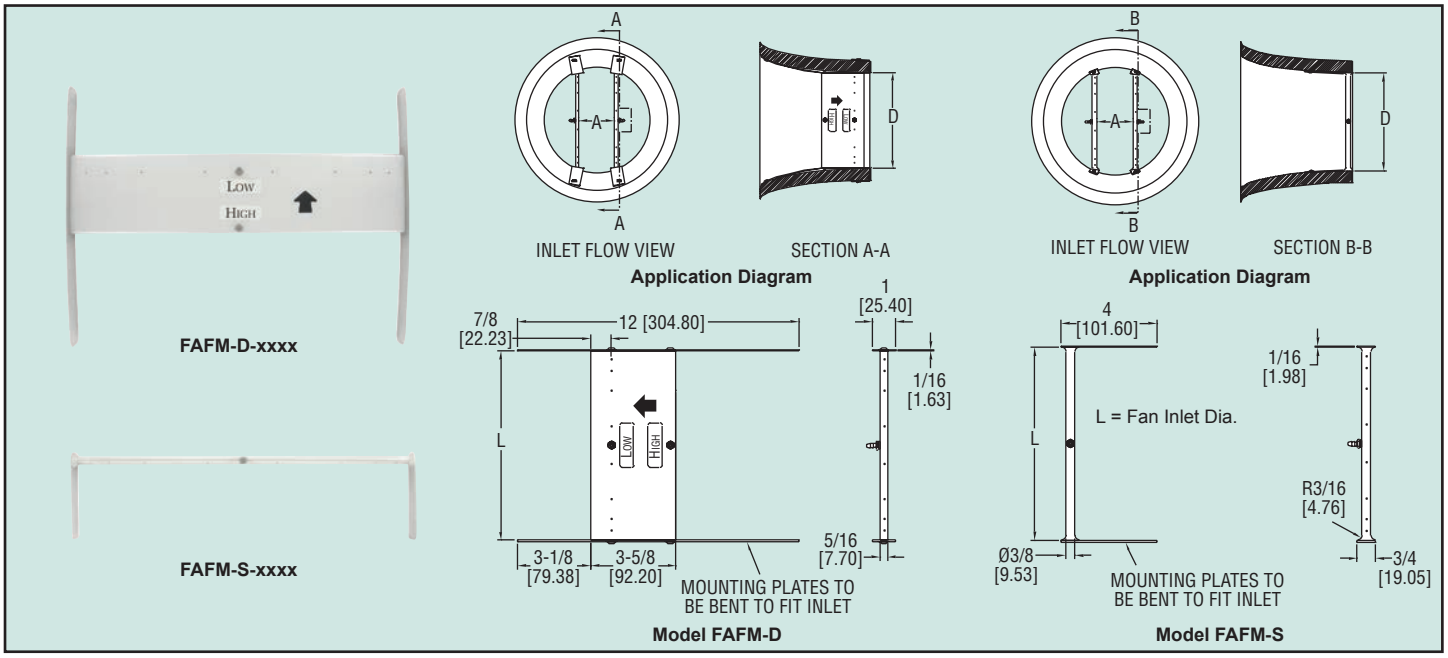

The Model FAFM Fan Inlet Air Flow Measuring Probes use evenly distributed total and static pressure measuring points to deliver an accurate measurement of flow in a fan inlet. The Air Flow Measuring Probes can be completely installed from outside of the fan making it ideal for when proper duct locations are unavailable. With its lightweight and durable construction in addition to its ease of installation, this product lends itself to being used in the HVAC industry.

There are two versions of the model FAFM fan inlet air flow probes to choose from depending on the depth of the fan inlet.

For fan inlets with depth less than 3-1/2″ (8.89 cm): Please order a fan inlet probe with an "S" suffix. This probe has a diameter of .375″ (.95 cm). It employs one total flow measuring tube and one static measuring tube. Each probe is covered with an extruded aluminum anodized coat. Each measuring tube has multiple sensing points.

For fan inlets with depth greater than 3-1/2″ (8.89 cm): Please order a fan inlet probe with a "D" suffix. This probe has a diameter of 3-1/2″ (8.89 cm). It employs extruded aluminum anodized coated probes with both total and static sensors on each tube.

Please Note: A set of two fan inlet air flow measurement probes comes with every model ordered. A set is necessary in order to ensure an accurate reading. No more than two air flow measurement probes will be needed to obtain an accurate reading.

SPECIFICATIONS

Wetted Materials: Aluminum with clear anodized finish.
Accuracy: ±2% (**Note:** Field calibration may be required).
Temperature Limit: 400°F (204°C).
Minimum Design Flow: 400 fpm (2.03 m/sec).
Maximum Design Flow: 12,000 fpm (60.96 m/sec).
Process Connections: 1/4″ barb.

FAFM - □ - □ □ □ □

S - Fan inlet depth less than 3-1/2″
D - Fan inlet depth greater than 3-1/2″

Fan inlet diameter in inches where the boxes represent the tens, ones, tenths, and hundredths digits of the diameter respectively.
i.e. __ __ . __ __ go to the corresponding box in the sequence.

Example: For a fan inlet that is exactly 12″ in diameter and has a depth of more than 3-1/2″ the model number will be: FAFM-D-1200.

Example: For a fan inlet that is 23.89″ in diameter and has a depth of less than 3-1/2″ the model number will be: FAFM-S-2389.

Example: For a fan inlet that is 6.24″ in diameter and has a depth of less than 3-1/2″ the model number will be: FAFM-S-0624.