Series 40T/ 40M

Digital Temperature Switch

3-1/2 Digit Display, Programming Configuration Key

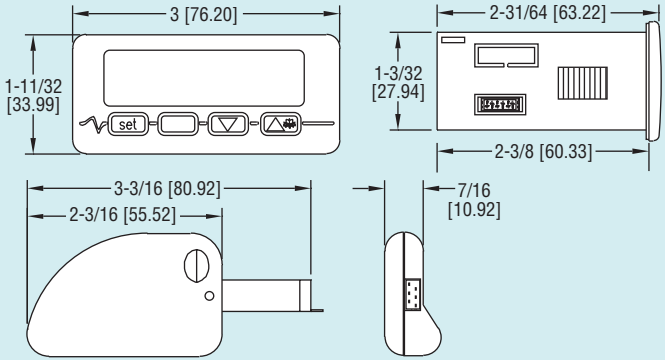

The Series 40 Digital Temperature Switch accepts a variety of inputs to allow temperature measurements and set points up to 1999°F (1300°C). Observing the current status of the control is made easier with the 3-1/2 digit, multi-color LED display that has alarm, defrost and output symbols. For added versatility, the temperature units can be field selected for °F or °C. For cooling applications, manual defrost mode can be initiated by pushing a single button. A flashing alarm informs users when the current temperature exceeds preset limits. When programming multiple units, a programming key is available to reduce set up time.

ACCESSORIES

40X-K, Configuration key . . . . . **$40.00**Ⓑ
TCS-J, J type thermocouple, 4″ probe, 48″ extension . . . . . **14.75**Ⓑ
TCS-K, K type thermocouple, 4″ probe, 48″ extension . . . . . **14.75**Ⓑ
TS-1, Brass PTC Thermistor Probe . . . . . **6.00**Ⓝ
TS-2, Stainless Steel PTC Thermistor Probe . . . . . **9.00**Ⓝ
TS-5, PVC PTC Thermistor Probe . . . . . **6.00**Ⓝ
TS-6, Polyamide Resin Coated Brass PTC Thermistor Probe . . . . . **7.00**Ⓝ
TS-7, Bead Type NPT Thermistor Probe . . . . . **4.00**Ⓝ

Ⓑ Items are subject to Schedule B discounts.
Ⓝ Items are net priced and are not subject to any discount.

SPECIFICATIONS

Probe Range:
K T/C: -140 to 1999°F (-100 to 1300°C);
J T/C: -140 to 1450°F (-100 to 800°C);
RTD: -320 to 1200°F (-200 to 650°C);
PTC: -58 to 300°F (-50 to 150°C);
NTC: -40 to 230°F (-40 to 110°C);
N. RTD: -110 to 570°F (-80 to 300°C).
Output: 16A @ 250 VAC SPDT relay (max current allowed is 10A).
Control Type: On/off.
Power Requirements: 12 to 24 VAC/VDC, 115 VAC or 230 VAC depending on model.
Accuracy: ±1% FS.
Display: 3-1/2 digit red display.
Resolution: 0.1°C.
Memory Backup: Non-volatile memory.
Ambient Temperature: 32 to 131°F (0 to 55°C).
Weight: 2.3 oz (65 g).
Front Panel Rating: IP 65.
Agency Approvals: CE, cUL, UL.

Thermocouple/RTD Input Models			Universal Input Models		
Model	**Supply Power**	**Price**	**Model**	**Supply Power**	**Price**
40T-10	115 VAC	**$50.00**	**40M-10**	115 VAC	**$65.00**
40T-20	230 VAC	**50.00**	**40M-20**	230 VAC	**65.00**
40T-40	12-24 VAC/VDC	**50.00**	**40M-40**	12-24 VAC/VDC	**65.00**