Dwyer

SERIES 16C, 8C, & 4C

TEMPERATURE LOOP CONTROLLERS

Universal Temperature Input, Single Control Output, RS-485 Communication

16C

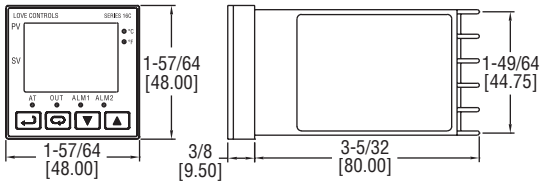

16C

8C

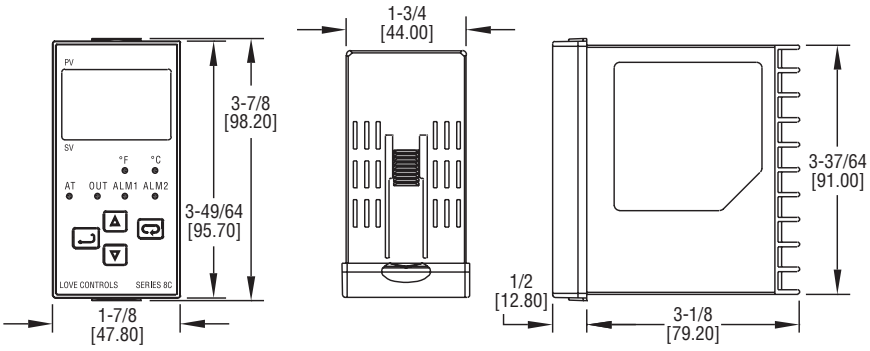

8C

4C

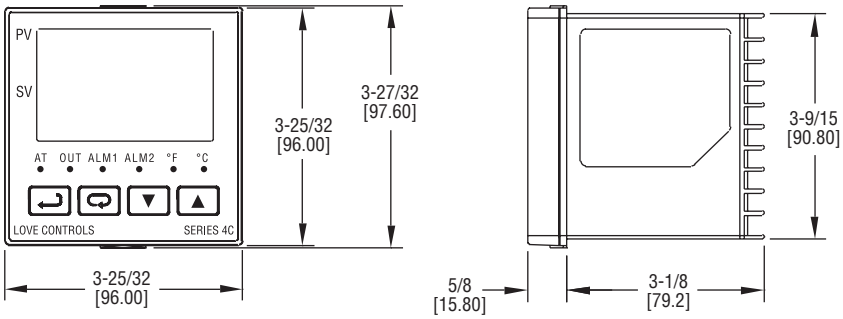

4C

The **SERIES 16C, 8C, & 4C** Temperature Loop Controllers offer advanced control features for the most demanding temperature or process applications. Offered in 3 standard DIN cutout housing sizes, these controllers are designed with dual, 4 digit LED displays for local indication of the process value, setpoint, and output conditions.

FEATURES/BENEFITS

- Universal input accepts RTD or thermocouple sensors
- On/Off, PID, or manual output control
- RS-485 standard on all models

APPLICATIONS

- Oven, boiler, or chiller control
- Hot plates/melt pots
- Food service equipment
- Environmental chambers
- Packaging equipment

MODEL CHART	
Model	**Output**
16C-2	Voltage pulse
16C-3	Relay
16C-5	Current

MODEL CHART	
Model	**Output**
8C-2	Voltage pulse
8C-3	Relay
8C-5	Current

MODEL CHART	
Model	**Output**
4C-2	Voltage pulse
4C-3	Relay
4C-5	Current

ACCESSORIES	
Model	**Description**
MN-1	Mini-Node™ RS-485 to USB converter
SCD-SW	Configuration software
A-600	R/C snubber

SPECIFICATIONS

Inputs: Thermocouple or RTD.
Display: Two 4 digit, 7 segment LED's. PV: Red, SV: Green.
Accuracy: ±0.25% of span, ±1 least significant digit.
Power Requirements: 100 to 240 VAC, 50/60 Hz.
Power Consumption: 5 VA max.
Operating Temperature: 32 to 122°F (0 to 50°C).
Memory Backup: Nonvolatile memory.
Control Output Ratings: Relay: SPST, 5 A @ 250 VAC resistive for 16C; SPDT, 5 A @ 250 VAC resistive for 8C and 4C; Voltage Pulse: 14 VDC (max. 40 mA); Current: 4 to 20 mA.
Communication: RS-485 Modbus® ASCII communication protocol.
Weight: 4 oz (114G) for 16C, 15 oz (425g) for 8C and 4C.
Front Panel Rating: IP56.
Agency Approvals: CE, cULus.

INPUT RANGES	
Input Types	**Range**
K Type TC	-328 to 2372°F (-200 to 1300°C)
K Type TC	-328 to 932°F (-200 to 500°C)
J Type TC	-148 to 2192°F (-100 to 1200°C)
J Type TC	-4 to 752°F (-20 to 400°C)
T Type TC	-328 to 752°F (-200 to 400°C)
T Type TC	4 to 752°F (-20 to 400°C)
E Type TC	32 to 1112°F (0 to 600°C)
N Type TC	-328 to 2372°F (-200 to 1300°C)
R Type TC	32 to 3092°F (0 to 1700°C)
S Type TC	32 to 3092°F (0 to 1700°C)
B Type TC	212 to 3272°F (100 to 1800°C)
L Type TC	-328 to 932°F (-200 to 500°C)
U Type TC	-328 to 1472°F (-200 to 800°C)
Pt 100 RTD	-328 to 1112°F (-200 to 600°C)
Pt 100 RTD	-4 to 932°F (-20 to 500°C)
Pt 100 RTD	32 to 212°F (0 to 100°C)

Modbus® is a registered trademark of Schneider Automation, Inc.