Dwyer

SERIES CRF2 | MERCOID® BY DWYER

CAPACITIVE LEVEL TRANSMITTER

Powder, Bulk or Liquids, No-Moving Parts, Excellent Chemical Resistance

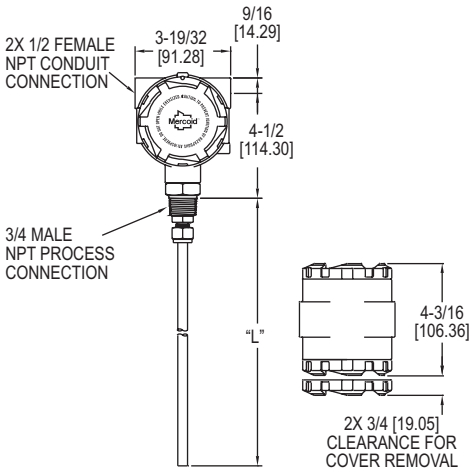

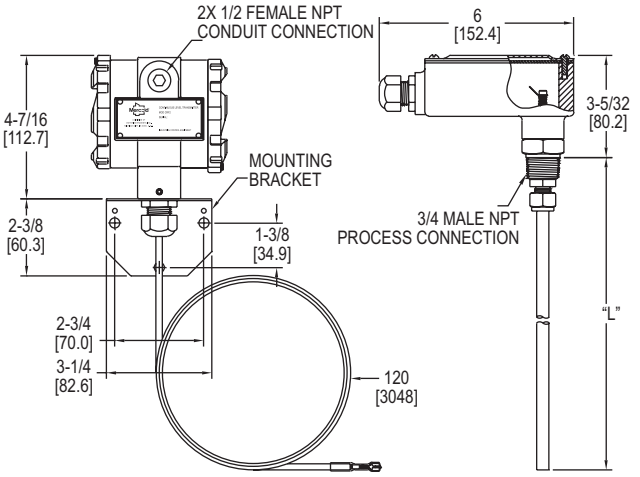

Remote Mount Housing

The **SERIES CRF2** Capacitive Level Transmitters provide a two-wire 4 to 20 mA output to indicate level of liquids, powders and bulk materials. The CRF2 senses capacitance changes resulting from the height of the material in the tank between the probe and the tank wall. In non-metallic tanks or tanks that do not have the wall parallel to the probe a ground reference must be used.

FEATURES/BENEFITS

- State of the art sensing technology, uses impulse RF admittance measurement which provides excellent accuracy and stability
- Comes with either a rigid or flexible probe depending on application installation need and probe length required
- Easy push button calibration of zero and span
- Any length probe can be customer ordered for any specific application
- FEP covered probe is ideal for use with corrosive media
- Immune to external RF sources like walkie-talkies and cell phones as well as minimal interference with radio communication or other electronic systems

APPLICATIONS

- Pulp and paper processing
- Chemical processing
- Food and beverage
- Aggregates
- Plastics
- Mining

SPECIFICATIONS

Service: Liquids, powders, and bulk materials compatible with wetted materials.
Wetted Materials: Standard: Rod/cable: FEP, Connection: 316 SS; Ground option: Rod/cable and connection: 316 SS; Cable spacers: PVC; Flange option: Material of flange.
Capacitance Range: 0 to 2000 pF.
Sensitivity: 0.15 pF.
Minimum Span: 8 pF.
Accuracy: ±0.5 pF or ±0.25% of span, whichever is greater.
Repeatability: ±0.25 pF or ±0.1% of span, whichever is greater.
Temperature Limits: Ambient: -40 to 185°F (-40 to 85°C); Process: -40 to 250°F (-40 to 121°C).
Pressure Limit: 100 psi (6.9 bar).
Power Requirements: 12 to 35 VDC.
Output Signal: 4 to 20 mA or 20 to 4 mA, 2 wire.
Response Time: 0.5 s.
Electrical Connection: Screw terminal.
Conduit Connection: 1/2″ NPT female.
Process Connection: Standard: 3/4″ NPT male; Optional: See model chart.
Enclosure Rating: NEMA 4X (IP66) weather tight/corrosion resistant.
Spark/Static Protection: 10^6 Ω dissipation resistance with spark gap. Surge current to 100 A max.
Calibration: Zero, span, 4 mA, 20 mA.
Mounting Orientation: Vertical.
Weight: 6′ rod type: 3.6 lb (1.63 kg).

MODEL CHART

Example	CRF2	-W	R	0	1T	-048	-M20	CRF2-WR01T-048-M20
Series	CRF2							Capacitive level transmitter
Enclosure		W						Weatherproof
		R						Remote mount weatherproof housing
Probe Type			R					Rod
			C					Cable
Ground				0				None included
				A				Attached ground rod (3″ or 4″ flange process connection types only)
				U				Unattached ground rod
Process Connection					1T			3/4″ NPT male
					2T			1″ NPT male
					3T			1-1/2″ NPT male
					1B			3/4″ BSPT
					2B			1″ BSPT
					3B			1-1/2″ BSPT
					1S			1″ sanitary clamp
					2S			1-1/2″ sanitary clamp
					3S			2″ sanitary clamp
					1F			2″ 150# flange, 316 SS
					2F			2″ 150# flange, PVC
					3F			3″ 150# flange, 316 SS
					4F			3″ 150# flange, PVC
					5F			4″ 150# flange, 316 SS
					6F			4″ 150# flange, PVC
Probe Length						XXX		Insertion length in inches. Example 048 is 48″ length. Rod type min: 24″, max: 144″; Cable type min: 24″, max: 360″
Options							M20	M20 conduit connection with cable gland

Examples: CRF2-WR01T-072, **$532.60**; CRF2-WR01T-096, **$599.80**. Consult website for pricing for all options.