UL LISTED

1/4 DIN CONTROL ENCLOSURES

Weatherproof, Durable, Pre-Cut Mounting Hole

A-900

A-901

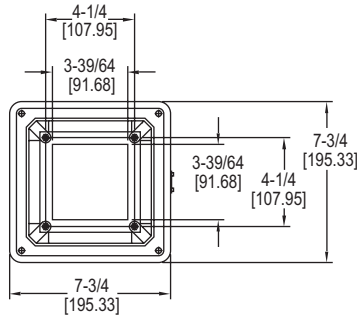

Top View

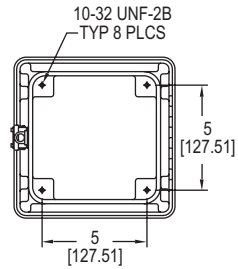

Bottom View

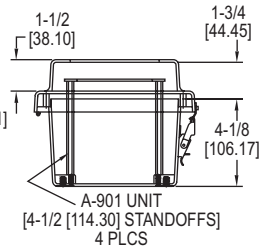

Side View

The **Model A-900 & A-901 1/4 DIN Control Enclosures** are rated weatherproof type NEMA 4X to protect controls from dirt, dust, oil, and water. The Model A-900 comes with a standard 1/4 DIN cutout in the front cover and the Model A-901 comes with a clear plastic front window. Both units feature a lockable latch to prevent unauthorized removal of the control from the enclosure.

FEATURES/BENEFITS

- UV stabilized for outdoor use
- Fiberglass material is easily punched or drilled for conduit connections
- Compatible with Love Series 2500, 2600, 4B, 4C, 4G,and Mercoid Series MPC, MPCJR

APPLICATIONS

- Wastewater remote pump stations
- Outdoor industrial ovens/furnaces/boilers

FOR MODELS: 25XX3, 26XX3, 26X3X, 26X33, MPC, MPCJR		
Ambient Temperature	**A-900 Maximum Current**	**A-901 Maximum Current**
77°F (25°C)	10 amps	10 amps
104°F (40°C)	10 amps	9 amps
131°F (55°C)	7.5 amps	6 amps

SPECIFICATIONS

Service: Indoor or outdoor.
Rating: NEMA 1, 2, 3, 3R, 4, 4X, 12 and 13.
Materials: Body: UV stabilized fiberglass reinforced polyester; Snap latch: 304 SS; Hinge: SS; Mounting feet and screws: 304 SS; Window: UV stabilized polycarbonate; Cover gasket: Neoprene.
Enclosure Rating: NEMA 4X (IP66).
Control Temperature Limits: When using the enclosures with controls that have 10 A relay outputs the extra heat generation decreases the maximum ambient temperature value that the control can be used at inside the enclosure. Other outputs on our controls are not a concern.
Agency Approvals: UL.

MODEL CHART

Model	Description	Price
A-900	Weatherproof enclosure, NEMA 4X, control direct panel mounts in the front of the enclosure	**$128.00**
A-901	Weatherproof enclosure, NEMA 4X, clear plastic window with rear panel for mounting the control inside the enclosure	**240.00**

ACCESSORIES

Model	Description	Price
A-600	R/C snubber	**$18.75**