Dwyer

SERIES 1831

DPDT LOW DIFFERENTIAL PRESSURE SWITCHES

Manual Reset, No Power Required

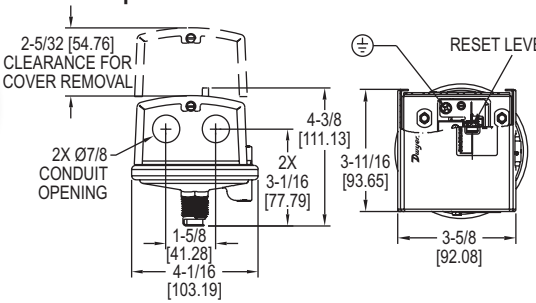

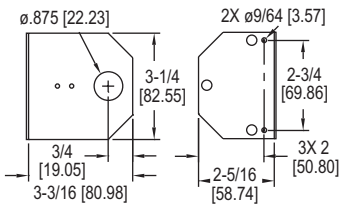

A-389 mounting bracket

Note: Shown with included mounting bracket. Bracket can rotate and be tightened at any angle.

5 YEAR LIMITED WARRANTY

One of our most popular differential pressure switches is now available with a DPDT switch and manual reset. The **Series 1831 DPDT Low Differential Pressure Switches** combine small size with 4% set point repeatability. Absolutely no power is required to operate the DPDT switch. Set point adjustment on the switch is easily accessible for modifying the set point.

The Series 1831 DPDT Low Differential Pressure Switches with Manual Reset eliminate common problems associated with typical high duct static cutout installations. Since the 1831 requires absolutely no power to drive its outputs, a separate power loop and its associated additional wiring and conduit is alleviated, reducing material and labor installation costs. Both control contacts of the Series 1831 activate at the same time. The potential of the lead switch shutting down the fan preventing the lag switch from sending an alarming signal to the DDC is no longer a probable system liability. Potential costly maintenance calls are diminished. Unlike typical switches that possess only a single conduit entry for both control loops, the Series 1831 provides two conduit connections simplifying wiring while eliminating additional conduit tees.

FEATURES/BENEFITS

- No power to operate DPDT switch means no additional wiring or conduit reduces material and installation labor costs
- Easy access for modifying set point simplifies adjustment
- Both control contacts activate at the same time eliminating system issues where lead switch activities prevent the lagging switch from sending a signal

APPLICATIONS

- High duct static cutout applications
- HVAC

MODEL CHART

Model	Description	Range (in w.c.)	Price
1831-1-RA-S	Manual reset DPDT, activate on increase	2.5 to 9	**$119.00**
1831-2-RA-S	Manual reset DPDT, activate on increase	7.5 to 23	**119.00**

SPECIFICATIONS

Service: Air and non-combustible, compatible gases.
Wetted Materials: Consult factory.
Temperature Limits: -30 to 180°F (-34 to 82.2°C).
Pressure Limits: 10 psig (68.95 kPa) continuous, 25 psig (172.4 kPa) surge.
Switch Type: 2 SPDT.
Actuation Time Difference: 1 millisecond maximum actuation delay between contacts.
Repeatability: ±4% max.
Electrical Rating: 4 A @ 125/250 VAC.
Electrical Connections: Screw type terminal block.
Process Connections: 1/8″ female NPT.
Mounting Orientation: Diaphragm in vertical position. Consult factory for other position orientations.
Set Point Adjustment: Screw type inside mounting spud.
Weight: 1 lb 2 oz (522 g).

ACCESSORIES

Model	Description	Price
A-489	4″ straight static pressure tip with flange	**$6.90**
A-491	6″ straight static pressure tip with flange	**6.90**
A-493	8″ straight static pressure tip with flange	**7.80**
A-302F-A	303 SS static pressure tip with mounting flange; for 3/16″ ID rubber or plastic tubing; 4″ insertion depth; includes mounting screws	**9.50**
A-302F-B	303 SS static pressure tip with mounting flange; for 3/16″ rubber or plastic tubing; 6″ insertion depth; includes mounting screws	**13.25**
A-302F-C	303 SS static pressure tip with mounting flange; for 3/16″ rubber or plastic tubing; 8″ insertion depth; includes mounting screws	**15.00**

Process Tubing Options: See page 455 (Gage Tubing Accessories)