Dwyer

**SERIES 3200G** | MERCOID® BY DWYER

# EXPLOSION-PROOF PRESSURE TRANSMITTER

## HART®, Push-Button Configuration, Rangeability (100:1)

**CALIBRATION SERVICES AVAILABLE**

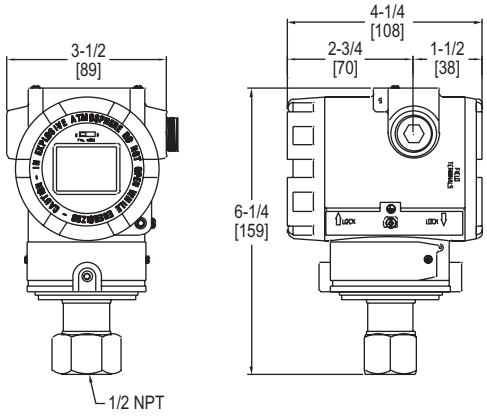


The Mercoid® **Series 3200G Explosion-Proof Smart Pressure Transmitter** is a microprocessor-based high performance transmitter, which has flexible pressure calibration, push-button configuration, and programmable using HART® Communication. The Series 3200G is capable of being configured with the zero and span buttons, a field calibrator is not required for configuration. The transmitter software compensates for thermal effects, improving performance. EEPROM stores configuration settings and stores sensor correction coefficients in the event of shutdowns or power loss. The Series 3200G is FM approved for use in hazardous (Classified) locations. The 100:1 rangeability allows the smart transmitter to be configured to fit any application.

### FEATURES/BENEFITS

- Completely configurable using zero/span buttons (no calibrator required)
- Rangeability (100:1)
- High accuracy (±0.075%)
- Automatic sensor temperature compensation
- Fail-mode process function

### APPLICATIONS

- Water and wastewater
- Chemical and petrochemical
- Pulp and paper
- Oil and gas
- Food and beverage

### SPECIFICATIONS

**Service:** Compatible gases, steam, liquids or vapors.
**Wetted Materials:** 316L SS.
**Accuracy:** ±0.075% FS (@ 20°C).
**Rangeability:** 100:1 turn down.
**Stability:** ±0.125% FSO/yr.
**Temperature Limits:** Process: -40 to 248°F (-40 to 120°C); Ambient: Without LCD -40 to 185°F (-40 to 85°C); With LCD -22 to 176°F (-30 to 80°C).
**Thermal Effect:** ±0.125% span/32°C.
**Power Requirements:** 11.9-45 VDC.
**Output Signal:** 4-20 mA / HART® Communication.
**Response Time:** 0.12 s.
**Damping Time:** 0.25 to 60 s.
**Loop Resistance:** Operation: 0 to 1500 Ω; HART® Communication: 250 to 500 Ω.
**Electrical Connection:** Two 1/2″ female NPT conduit, screw terminal.
**Process Connections:** 1/2″ female NPT.
**Display:** Optional 5 digit LCD.
**Enclosure Rating:** NEMA 4X (IP66) and explosion proof for Class I, Div I Groups A, B, C and D.
**Weight:** 5.5 lb (2.5 kg).
**Agency Approvals:** ATEX, CE, FM.

### MODEL CHART

| Model | Range psi (kPa) | Span Limits* | | Maximum Pressure psi (bar) | LCD Display | Price |
|---|---|---|---|---|---|---|
| | | Minimum psi (kPa) | Maximum psi (kPa) | | | |
| **3200G-1-FM-1-1** | -14.5 to 21 (-100 to 150) (Factory set 0 to 21 psig) | 0.22 (1.5) | 21 (150) | 58 (4) | No | **$840.00**Ⓑ |
| **3200G-2-FM-1-1** | -14.5 to 217 (-100 to 1500) (Factory set 0 to 217 psig) | 2 (15) | 217 (1500) | 580 (40) | No | **840.00**Ⓑ |
| **3200G-3-FM-1-1** | 0 to 725 (0 to 5000) | 7.25 (50) | 725 (5000) | 2000 (138) | No | **840.00**Ⓑ |
| **3200G-4-FM-1-1** | 0 to 3600 (0 to 25000) | 36 (250) | 3600 (25000) | 10000 (690) | No | **840.00**Ⓑ |
| **3200G-5-FM-1-1** | 0 to 8500 (0 to 60000) | 87 (600) | 8700 (60000) | 11600 (800) | No | **1000.00**Ⓑ |
| **3200G-1-FM-1-1-LCD** | -14.5 to 21 (-100 to 150) (Factory set 0 to 21 psig) | 0.22 (1.5) | 21 (150) | 58 (4) | Yes | **920.00**Ⓑ |
| **3200G-2-FM-1-1-LCD** | -14.5 to 217 (-100 to 1500) (Factory set 0 to 217 psig) | 2 (15) | 217 (1500) | 580 (40) | Yes | **920.00**Ⓑ |
| **3200G-3-FM-1-1-LCD** | 0 to 725 (0 to 5000) | 7.25 (50) | 725 (5000) | 2000 (138) | Yes | **920.00**Ⓑ |
| **3200G-4-FM-1-1-LCD** | 0 to 3600 (0 to 25000) | 36 (250) | 3600 (25000) | 10000 (690) | Yes | **920.00**Ⓑ |
| **3200G-5-FM-1-1-LCD** | 0 to 8500 (0 to 60000) | 87 (600) | 8700 (60000) | 11600 (800) | Yes | **1080.00**Ⓑ |

**Note:** Contact factory for custom calibration.
*Span = Upper range limit - Lower range limit.

Ⓑ Items are subject to Schedule B discounts.

### ACCESSORIES

| Model | Description | Price |
|---|---|---|
| **A-630** | Stainless steel angle type bracket with SS bolts | **$95.00**Ⓑ |
| **A-631** | Stainless steel flat type bracket with SS bolts | **95.00**Ⓑ |
| **BBV-0N** | 2-valve block manifold | **99.00** |
| **DevCom2000** | HART® communication protocol software | **1592.00**Ⓑ |

Ⓑ Items are subject to Schedule B discounts.

HART® is a registered trademark of Hart Communication Foundation.

Dwyer

**SERIES 3200G** | MERCOID® BY DWYER

# EXPLOSION-PROOF PRESSURE TRANSMITTER

## HART®, Push-Button Configuration, Rangeability (100:1)

**CALIBRATION SERVICES AVAILABLE**

**MODEL CHART**

| Example | 3200G | -2 | -FM | -3 | -1 | -LES | S2 | A1 | 05 | S | 2 | -05 | -LCD | 3200G-2-FM-3-1-LESS2A105S2-05-LCD | Price |
|---|---|---|---|---|---|---|---|---|---|---|---|---|---|---|---|
| **Series** | 3200G | | | | | | | | | | | | | Explosion-proof pressure transmitter | **$840.00**Ⓑ |
| **Range** | | 1 | | | | | | | | | | | | -14.5 to 21 psig (factory set 0 to 21 psig) | - |
| | | 2 | | | | | | | | | | | | -14.5 to 217 psig (factory set 0 to 217 psig) | - |
| | | 3 | | | | | | | | | | | | 0 to 725 psig | - |
| | | 4 | | | | | | | | | | | | 0 to 3600 psig | - |
| | | 5 | | | | | | | | | | | | 0 to 8500 psig | **+160.00**Ⓑ |
| **Approval** | | | FM | | | | | | | | | | | FM approved | - |
| | | | ATEX | | | | | | | | | | | ATEX approved | **+232.00**Ⓑ |
| | | | WP | | | | | | | | | | | Weatherproof only (Only available with 316 SS housing) | - |
| **Process Connection** | | | | 1 | | | | | | | | | | 1/2″ female NPT | - |
| | | | | 3 | | | | | | | | | | Diaphragm seal | - |
| **Electrical Connection** | | | | | 1 | | | | | | | | | 1/2″ female NPT | - |
| **Diaphragm Seal Type** | | | | | | LED | | | | | | | | 1 extended diaphragm seal direct mount | **+2571.00**Ⓑ |
| | | | | | | LES | | | | | | | | 1 extended diaphragm seal capillary type high | **+2854.00**Ⓑ |
| | | | | | | LFD | | | | | | | | 1 flush diaphragm seal direct mount | **+1581.00**Ⓑ |
| | | | | | | LFS | | | | | | | | 1 flush diaphragm seal capillary type | **+1793.00**Ⓑ |
| **Mounting Flange** | | | | | | | S2 | | | | | | | 2″ (50 mm) 316L SS | - |
| | | | | | | | S3 | | | | | | | 3″ (80 mm) 316L SS | **+425.00**Ⓑ |
| **Mounting Flange Rating** | | | | | | | | A1 | | | | | | ANSI class 150# | - |
| | | | | | | | | A2 | | | | | | ANSI class 300# | **+114.00**Ⓑ |
| | | | | | | | | D1 | | | | | | DIN PN 10/16 | - |
| | | | | | | | | D2 | | | | | | DIN PN 25/40 | **+115.00**Ⓑ |
| | | | | | | | | J1 | | | | | | JIS 10 K | - |
| | | | | | | | | J2 | | | | | | JIS 20 K | **+115.00**Ⓑ |
| **Extension Length** | | | | | | | | | 00 | | | | | No extension (standard for flush mount) | - |
| | | | | | | | | | 05 | | | | | 2″ extension | - |
| | | | | | | | | | 10 | | | | | 4″ extension | **+115.00**Ⓑ |
| | | | | | | | | | 15 | | | | | 6″ extension | **+213.00**Ⓑ |
| **Diaphragm Material** | | | | | | | | | | S | | | | 316L SS diaphragm | - |
| | | | | | | | | | | P | | | | PTFE and 316L SS diaphragm | **+285.00**Ⓑ |
| | | | | | | | | | | H | | | | Hastelloy C-276 diaphragm | **+425.00**Ⓑ |
| | | | | | | | | | | T | | | | Tantallum diaphragm | **+709.00**Ⓑ |
| **Fill Fluid** | | | | | | | | | | | 2 | | | Silicon oil (-40 to 400°F) | - |
| **Capillary Length** | | | | | | | | | | | | XX | | 0 to 20 feet | - |
| **Options** | | | | | | | | | | | | | LCD | 5 digit LCD | **+80.00**Ⓑ |
| | | | | | | | | | | | | | SSH | 316 SS housing (only available with WP approval) | **+849.00**Ⓑ |
| | | | | | | | | | | | | | NIST | NIST calibration | **+144.00**Ⓝ |
| | | | | | | | | | | | | | CC | Custom calibration | **+107.00**Ⓑ |

Ⓑ Items are subject to Schedule B discounts. Ⓝ Items are net priced and are not subject to any discount.

**CUSTOM CALIBRATION VALUES**

| | |
|---|---|
| **Primary Units** | in w.c., ft w.c., mm w.c., in Hg, psig, g/cm², kg/cm², Pa, kPa, bar, mbar, Torr, Atm, mm Hg |
| **Upper Range Limit** | 20 mA value |
| **Lower Range Limit** | 4 mA value |
| **Damping Time** | 0 to 60 seconds |
| **Display Mode** | Primary unit, %, mA, rotate |