Dwyer

SERIES MM

MINI-MASTER® FLOWMETERS

2″ or 1-1/2″ Scale, Configurable Valve Option

CALIBRATION SERVICES AVAILABLE

Standard model MMA-X-LV

Standard model MMA-X with field configurable valve, bottom mount

Standard model MMA-X with field configurable valve, top mount

Model MMF-50-PV 1-1/2″ scale, with metering valve, knob

Model MMF-10 with 1-1/2″ scale, no valve

Model MMF-10-TMV with top-mounted valve- for vacuum service. Use screwdriver to adjust

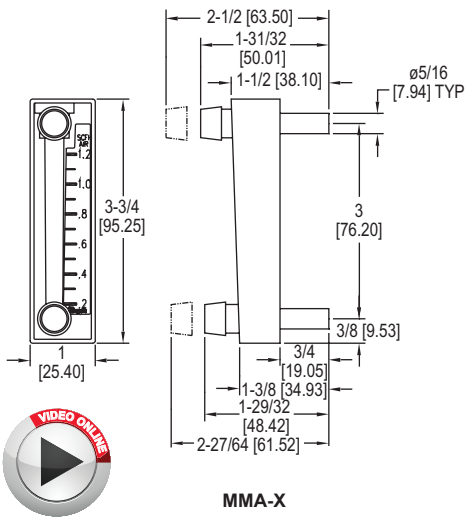

MMA-X

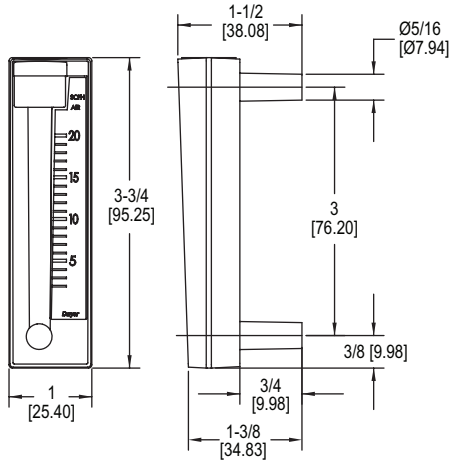

MMA-X-LV

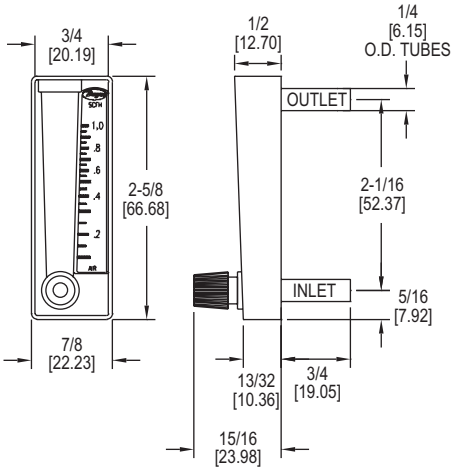

MMF-X

The **Series MM Mini-Master® Flowmeters** consists of two series of flowmeters suitable for both gas and liquid applications with advanced features at a low cost.
The Series MMA is a 2″ (51 mm) scale flowmeter that is user configurable with or without non-removable top or bottom front mounted metering valves. It is constructed from transparent nylon material providing high chemical resistance and is easily disassembled via the provided key for cleaning or reconfiguration.
The Series MMF is a 1-1/2″ (38 mm) scale compact flowmeter ideal for measuring small volume air. It features bezel type mounting that can be quickly installed from the front of the instrument panel.

FEATURES/BENEFITS

- Low installation costs with easy mounting
- Long operation life with durable construction
- Precision molding enables high repeatability
- White back on the flow tube allows for better visibility of the float increasing reading accuracy
- Side printed scale graduations allows for instantaneous flow reading saving time
- Compact bodies require minimal panel space freeing valuable space

APPLICATIONS

- Medical equipment
- Air samplers
- Gas analyzers
- Pollution monitors
- Chemical injectors
- Cabinet purging

SPECIFICATIONS

MMA SPECIFICATIONS
Service: Compatible gases and liquids.
Wetted Materials: Body: Nylon 12; O-rings: Buna-N (optional materials available); Float: Black glass, K monel, stainless steel, tungsten carbide.
Temperature Limit: 130°F (54°C).
Pressure Limit: 100 psi (6.9 bar) with compression fitting. 50 psi (3.4 bar) with tubing clamp.
Accuracy: ±4% FS.
Process Connection: 5/16″ OD for push on rubber or plastic tubing with provided spring tubing clamp. Connect to rigid tubing with double compression fitting.
Weight: 1 oz (28.35 g).
Agency Approvals: Meets the technical requirements of EU Directive 2011/65/EU (RoHS II).

MMF SPECIFICATIONS
Service: Compatible gases and liquids.
Wetted Materials: Body: Styrene acrylonitrile; Float: SS, black glass, nylon; Valve: Polyurethane.
Temperature Limit: 125°F (51°C).
Pressure Limit: 50 psi (3.4 bar). Valve option: 10 psi (0.6 bar).
Accuracy: ±10% FS.
Process Connection: 1/4″ OD for push on rubber or plastic tubing. Connect to rigid tubing with compression fittings.
Weight: 0.5 oz (14.17 g).
Agency Approvals: Meets the technical requirements of EU Directive 2011/65/EU (RoHS II).

Dwyer

SERIES MM

MINI-MASTER® FLOWMETERS

2″ or 1-1/2″ Scale, Configurable Valve Option

CALIBRATION SERVICES AVAILABLE

MODEL CHART		
Model	**Description**	**Price**
MMA-X	Standard MMA	**$41.00**
MMA-X-LV	MMA without configurable valve	**31.50**
How To Order: MMA-Range No.-Optional Valve **Example:** MMA -4-LV (Series MMA with .5-5 SCFH air range without configurable valve)		

ACCESSORIES - MMA		
Model	**Description**	**Price**
A-327	5/16″ union	**$8.80**

RANGE CHART - MMA			
Range No.	**SCFH Air**	**Range No.**	**LPM Air**
3	.5 to 2.5	20	.2 to 1.2
4	.5 to 5	21	.25 to 2.5
5	1 to 10	22	.5 to 5
6	2 to 20	23	1 to 10
7	5 to 50	24	2.5 to 25
8	10 to 100	25	5 to 50
9	20 to 200	26	10 to 100
10	30 to 300	27	15 to 150
Range No.	**GPH Water**	**Range No.**	**CC/Min. Water**
30	1 to 8	35	5 to 50
31	1 to 16	36	10 to 150
32	4 to 40	37	20 to 200
33	5 to 60	38	50 to 500
Range No.	**LPM Water**		
40	.1 to 1.1		
41	.25 to 2.5		
42	.3 to 3.5		

MODEL CHART		
Model	**Description**	**Price**
MMF-X	Standard MMF	**$24.25**
MMF-X-PV	MMF with bottom mount valve	**24.50**
MMF-X-TMV	MMF with top mount valve	**24.50**
How To Order: MMF-Range No.-Valve **Example:** MMF-1-PV (Series MMF with .1-1 SCFH air range with valve)		

ACCESSORIES - MMF		
Model	**Description**	**Price**
A-328	1/14″ union	**$8.80**

RANGE CHART - MMF	
Range No.	**Range (SCFH Air)**
1	.1 to 1
2	.2 to 2
10	1 to 10
50	5 to 50
100	10 to 100

OPTIONS		
To order add suffix:	**Description**	**Price**
-NIST	NIST traceable calibration certificate	**$215.00**Ⓝ
Ⓝ Items are net priced and are not subject to any discount.		

MMA-X tubing connections secured by clamp. “Standup” mounting clip shown.

Spring retainers on connection tubes secure panel mounted MMA-X. Compression union, P/N A-327 shown.

Model MMF mounts easily from front of panel. Drill two 9/32″ or 5/16″ dia. holes in panel on 2-1/16″ centers. Insert mounting connector spuds. From rear, slide on the two spring retainers (furnished) and push on rubber or plastic tubing.

Model MMF connections. Connector at top, installed in panel, has retainer and flexible tubing in place. Connector at bottom shows alternative connection with metal or rigid plastic tubing, using a double compression nylon tube union (as Dwyer Part No. A-328).