Series BB-200 Bourdon Tube Differential Pressure Switches

Specifications - Installation and Operating Instructions

Type BB-221, BB-241 — Plain Case; Type BB-221, BB-241 — Plain Case Enclosed in Explosion-Proof Housing

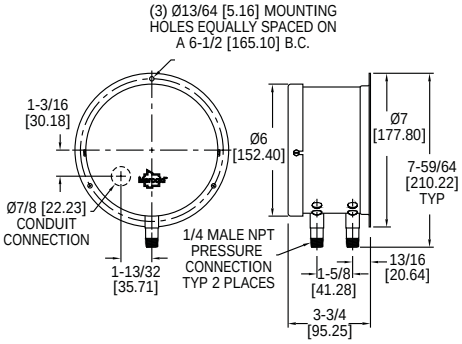

Type BB-223, BB-243 — Flanged Case; Type BBW-223, BBW-243 — Weather-Proof Housing

Series BB-200 Differential Pressure Switches "make" or "break" an electrical circuit on changes in the difference between two pressures. These switches are ideal for checking differential pressure (head) across high-pressure pumps and filters.

The pressure difference required to operate these switches is adjustable to the maximum operating limits shown in the tables on the other side of this page. The change in pressure difference required to restore the switch to its original position is not adjustable — this is the sensitivity. Once the operating pressure difference has been established, it will remain constant regardless of the actual pressures. The sensitivity is fixed at the factory and cannot be changed in the field. Consult the tables for the sensitivity of each respective range.

INSTALLATION (All Types): Install control in location recommended by equipment manufacturer. Control must be mounted level. Wire in accordance with applicable electrical codes. (See nameplate for electrical rating.)

Connect **HIGH PRESSURE** source to **REAR** bourdon tube and **LOW PRESSURE** source to **FRONT** bourdon tube. Connections are 1/4″ NPT.

Every Series BB-200 Bourdon Tube Differential Pressure Switch is set at the factory and the setting is recorded on the Factory Setting Card attached to the control. Should field adjustments be necessary, a test pump set or source of variable pressure will be required. The pressure should be connected to each bourdon tube through a valve as shown in Illustration No. 2 on other side of this page.

Note: One valve can be omitted if necessary. When calibrating, it is desirable to simulate actual operating conditions as closely as possible.

ELECTRICAL CAPACITY SPST 0.9A @ 24V, 0.3A @ 120V 0.15 @ 240V AC. 0.45A @ 24V. 0.15A @ 120V 0.07A @ 240V DC.

SPECIFICATIONS

Wetted Materials: 403 SS bourdon tube. 316 SS optional.
Temperature Limits: -10 to 180°F (-23 to 82°C).
Pressure Limit: Maximum pressure of the operating range.
Enclosure Rating: General purpose. Weatherproof and explosion-proof optional.
Switch Type: SPST mercury switch. Models shown close on increase of differential pressure. Replace "-3" with "-2" in model number for open on increase.
Electrical Rating: 5A @ 120 VAC, 2.5A @ 240 VAC, 2.5A @ 120 VDC, 1A @ 240 VDC.
Electrical Connections: Screw type.
Conduit Connection: 7/8″ (22.23 mm) hole for 1/2″ (12.7 mm) conduit hub.
Process Connection: 1/4″ male NPT. 1/2″ male NPT on ranges 15S and 16S.
Mounting Orientation: Vertical. Vibration Free.
Set Point Adjustment: Thumbwheel screw.
Weight: 4 lb (1.8 kg).
Deadband: See model chart.

WARNING

A failure resulting in injury or damage may be caused by overpressures, excessive vibration or pressure pulsation, excessive temperature, corrosion of pressure-containing parts and movement assembly, electrical overload, or other misuse.

MERCOID DIVISION
DWYER INSTRUMENTS, INC.
P.O. BOX 258 • MICHIGAN CITY, INDIANA 46361 U.S.A.

Phone: 219/879-8000
Fax: 219/872-9057

www.dwyer-inst.com
e-mail: info@dwyer-inst.com

HOUSING The standard control housing is equivalent to NEMA-1. The controls are, however, available in housings suitable for Class 1, Group D, or Class 2, Groups E, F, and G (hazardous locations) or in Weather-Proof enclosures.

OPERATING RANGES

403SS Bourdon Tube*

Working Pressure Range psig (bar)	Range No.	Max Surge Limit psig (bar)	Adj. Oper. Pressure Difference psig (bar)	BB-221-2 or -3. Deadband Fixed-Not Adjusted (bar)
30˝ Vac. 60 (-.0746 - 4.134)	**R25S**	200	0 - 40	0 - 4
5-100 (0.276 - 34.45)	**R6S**	200	0 - 40	0 - 4
10-200 (0.689 - 13.78)	**R8S**	300	0 - 120	0.75
10-300 (0.689 - 20.67)	**R9S**	500	0 - 180	1.25
25-600 (1.723 - 41.34)	**R10S**	800	0 360	5
50-1000 (3.445 - 68.90)	**R11S**	1500	0 - 600	10
100-1500 (6.890 - 103.4)	**R12S**	2000	0 - 900	10 - 15
300-2500 (20.67 - 172.3)	**R13S**	3000	0 - 1500	30
500-5000 (34.45 - 344.5)	**R15S**	7000	0 - 3000	50
1000-8000 (69.90 - 551.2)	**R16S**	10,000	0 - 5000	150

* Not to be used in Chlorine applications. Use 316SS Bourdon Tube.

316SS Bourdon Tube

Working Pressure Range psig (bar)	Range No.	Max Surge Limits psig (bar)	Adj. Oper. Pressure Difference psig (bar)	BB-241-2 or 241-3 Fixed Sensitivity (bar)
5-75 (-1.1-4.134)	**23E**	200	0 - 40	1.25
10-100 (0.276-34.45)	**6E**	200	0 - 40	1.8
10-150 (0.689-13.78)	**24E**	300	0 - 120	2
10-300 (0.689-20.67)	**9E**	500	0 - 180	3.75
30-400 (1.723-41.34)	**21E**	800	0 360	6.5
75-800 (3.445-68.90)	**22E**	1500	0 - 600	13
100-1000 (6.890-103.4)	**11E**	2000	0 - 900	25
200-2500 (20.67-172.3)	**13E**	3000	0 - 1500	50

When ordering, please specify: Type Number, Range Number (based on maximum surge pressure of system), and Operating Pressure difference desired — required for factory setting.

HOW TO SET OPERATING POINT

Types BB-200-2

For field adjustment a test pressure or vacuum pump should be used. However, a known pressure source with proper valving may be used in place of a test pump. The following procedure is recommended for setting these controls in the field:

1. Connect higher pressure source to rear bourdon tube.
2. Apply and entrap a known pressure valve in the front bourdon tube.
3. Increase the pressure on the rear bourdon tube to obtain a required pressure difference between the bourdon tubes at which value the switch will open contact.
4. If the switch contact is already open, turn Range Adjustment “S” to the left until the contact closes.
5. Turn Range Adjustment “S” to the right until the switch contact closes.

drawing identified as “Illustration No. 1”
on page 2 of old (5/92) bulletin IN-94A

Illustration No. 1

Note: The thread on adjustment screw “S” is extremely fine and will require a considerable amount of turning if adjustment is to be changed appreciably.

Types BB-200-3

For field adjustment a test pressure or vacuum pump should be used. However, a known pressure source with proper valving may be used in place of a test pump. The following procedure is recommended for setting these controls in the field:

1. Connect higher pressure source to rear bourdon tube.
2. Apply and entrap a known pressure valve in the front bourdon tube.
3. Increase the pressure on the rear bourdon tube to obtain a required pressure difference between the bourdon tubes at which value the switch will open contact.
4. If the switch contact is already closed, turn Range Adjustment “S” to the left until the contact open.
5. Turn Range Adjustment “S” to the right until the switch contact closes.

drawing identified as “Illustration No. 2”
on page 2 of old (5/92) bulletin IN-94A

Illustration No. 2

Printed in U.S.A. 2/10 FR# 71-441600-00 Rev. 2

MERCOID DIVISION
DWYER INSTRUMENTS, INC.
P.O. BOX 258 • MICHIGAN CITY, INDIANA 46361 U.S.A.
Phone: 219/879-8000 **www.dwyer-inst.com**
Fax: 219/872-9057 **e-mail: info@dwyer-inst.com**