Dwyer
SERIES DH3

DIGIHELIC® 3 DIFFERENTIAL PRESSURE CONTROLLER

Digihelic® Controller in Photohelic® Gage, Square Root Output for Flow

Note: Shown with optional -SS bezel.
Backward compatible+ with Magnehelic® gage.

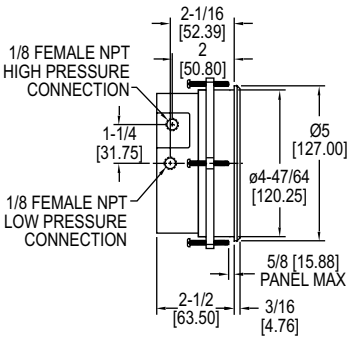

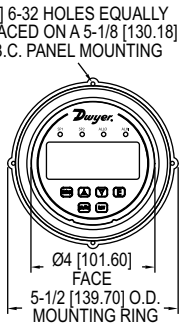

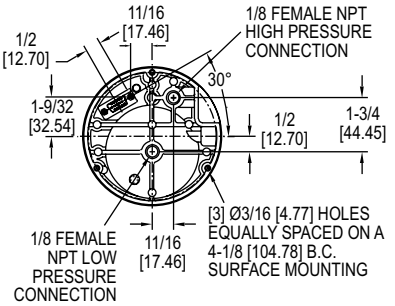

The **SERIES DH3** Digihelic® Differential Pressure Controller is a 3-in-1 instrument possessing a digital display gage, control relay switches, and a transmitter with current output all packed in the popular Photohelic® gage style housing. Combining these 3 features allows the reduction of several instruments with one product, saving inventory, installation time and money. The Digihelic® controller is the ideal instrument for pressure, velocity and flow applications, achieving a 1% full scale accuracy on ranges down to the extremely low 0.25 in w.c. to 2.5 in w.c. full-scale. Ranges of 5 in w.c. and greater maintain 0.5% FS accuracy. Bi-directional ranges are also available.
The Series DH3 Digihelic® controller allows the selection of pressure, velocity or volumetric flow operation in several commonly used engineering units. 2 SPDT control relays with adjustable deadbands are provided along with a scalable 4-20 mA process output.
Programming is easy using the menu key to access 5 simplified menus which provide access to: security level; selection of pressure, velocity or flow operation; selection of engineering units; K-factor for use with flow sensors; rectangular or circular duct for inputting area in flow applications; set point control or set point and alarm operation; alarm operation as a high, low or high/low alarm; automatic or manual alarm reset; alarm delay; view peak and valley process reading; digital damping for smoothing erratic process applications; scaling the 4-20 mA process output to fit your applications range and field calibration.

FEATURES/BENEFITS

- 3-in-1 instrument allows the reduction of several instruments with one product, saving inventory, installation time and money
- Full scale accuracy of 1% even on extremely low ranges, and 0.5% for ranges above 5 in w.c. provide for greater measurement precision
- Secure menu program provides access to device operation only for the right skill level
- Optional stainless steel bezel is the same installation diameter as Magnehelic® gage and simplifies field upgrade to DH3 pressure controller

APPLICATIONS

- SCFM duct flow
- Filter status
- Duct or building static pressure
- Damper and fan control

MODEL CHART

Model	Ranges	Model	Ranges
DH3-002	0-0.25 in w.c.	***DH3-010**	0-50 in w.c.
DH3-003	0-0.5 in w.c.	***DH3-011**	0-100 in w.c.
DH3-004	0-1 in w.c.	***DH3-013**	0.25-0-0.25 in w.c.
DH3-005	0-2.5 in w.c.	***DH3-014**	0.5-0-0.5 in w.c.
DH3-006	0-5 in w.c.	***DH3-015**	1-0-1 in w.c.
DH3-007	0-10 in w.c.	***DH3-016**	2.5-0-2.5 in w.c.
DH3-009	0-25 in w.c.	***DH3-017**	5-0-5 in w.c.
		***DH3-018**	10-0-10 in w.c.

*Velocity and volumetric flow not available on bi-directional range units and models DH3-010 and DH3-011.

SPECIFICATIONS

Service: Air and non-combustible, compatible gases.
Wetted Materials: Consult factory.
Housing Material: Die cast aluminum case and bezel.
Accuracy: ±1.5% for 0.25 in and ±0.25 in w.c. ranges. Ranges 0.5 in to 5 in w.c. and corresponding bi-directional (except ±2.5 in w.c.) ±1%; All other ranges: ±0.5% @ 77°F (25°C) including hysteresis and repeatability (after 1 hour warm-up).
Stability: < ±1% per year.
Pressure Limits: Ranges ≤ 2.5 in w.c.: 25 psi; ±2.5″, 5 in w.c.: 5 psi; 10 in w.c.: 5 psi; 25 in w.c.: 5 psi; 50 in w.c.: 5 psi; 100 in w.c.: 9 psi.
Temperature Limits: 32 to 140°F (0 to 60°C).
Compensated Temperature Limits: 32 to 140°F (0 to 60°C).
Thermal Effects: 0.020%/°F (0.036/°C) from 77°F (25°C). For 0.25 in and ±0.25 in w.c. ranges: ±0.03%/°F (±0.054%/°C).
Power Requirements: 12-28 VDC, 12-28 VAC 50 to 400 Hz.
Power Consumption: 3 VA max.
Output Signal: 4-20 mA DC into 900 Ω max.
Zero & Span Adjustments: Accessible via menus.
Response Time: 250 ms (damping set to 1).
Display: Backlit 4 digit LCD 0.4″ height LED indicators for set point and alarm status.
Electrical Connections: 15 pin male high density D-sub connection. 18″ (46 cm) cable with 10 conductors included.
Process Connections: 1/8″ female NPT. Side or back connections.
Mounting Orientation: Mount unit in vertical plane.
Size: 5″ (127 mm) OD x 3-1/8″ (79.38 mm); -SS bezel: 4-3/4″ (120.7 mm) OD x 2-21/32 (67.5 mm).
Weight: 1.75 lb (794 g).
Agency Approvals: CE.

SWITCH SPECIFICATIONS
Switch Type: 2 SPDT relays.
Electrical Rating: 1 A @ 30 VAC/VDC.
Set Point Adjustment: Adjustable via keypad on face.

ACCESSORIES

Model	Description
A-298	Flat aluminum bracket for flush mounting
A-301	Static pressure tip for 1/4″ metal tubing connection
A-302	Static pressure tip for 3/16″ and 1/8″ I.D. plastic or rubber tubing
A-302F-A	303 SS static pressure tip with mounting flange; for 3/16″ ID rubber or plastic tubing; 4″ insertion depth; includes mounting screws
A-370	Mounting bracket flush mount bracket; bracket is then surface mounted; steel with gray hammertone epoxy finish
A-489	4″ straight static pressure tip with flange

OPTIONS

To order add suffix:	Description
-SS	304 brushed stainless steel bezel. +Backward compatible with standard Magnehelic® gage installation diameter
Example: DH3-004-SS	
-NIST	NIST traceable calibration certificate
Example: DH3-004-NIST	
-FC	Factory calibration certificate
Example: DH3-004-FC	

Process Tubing Options: See page 489 (Gage Tubing Accessories)