ELECTRONIC PRESSURE CONTROLLER

2 Switches, Indicating Gage, and Transmitter in One Package

CALIBRATION SERVICES AVAILABLE

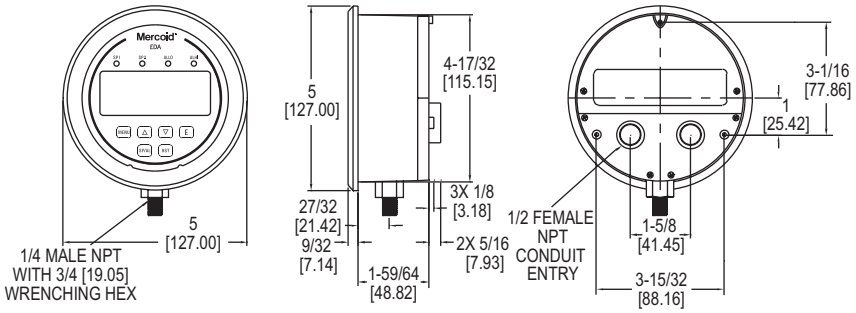

Series EDA Electronic Pressure Controller is an extremely versatile compact package that can replace a separate gage, two switches, and a transmitter in a system saving money, installation time, and panel space. The EDA incorporates two SPDT relays that have the on and off points fully adjustable over the range for control or alarm use. Front face has LED indicators for switch status and a large backlight two-line display showing process value and indication units. Programming is easy with simple menu structure, two-line display, and external programming buttons. Weatherproof housing is ideal for a wide variety of applications with panel mount, flush mount, or pipe mount ability. Features include zero set, adjustable dampening, menu lock out, peak and valley indication, removable terminal blocks, adjustable time delay, and scalable transmitter output.

FEATURES/BENEFITS

- Versatile compact package that can replace a separate gage, two switches, and a transmitter in a system saving money, installation time, and panel space
- Fully programmable to meet simple or complex application needs
- Test mode function simulates input over the range without pressuring to easily test switches and transmitter output function
- Fail-safe relay output choices in case of sensor failure, over pressure, high temperature limit, low temperature limit, or keypad short
- Selectable alternation of set points between the relays for even wear on duplex pump applications
- Weatherproof housing is ideal for a wide variety of applications with panel mount, flush mount, or pipe mount ability

APPLICATIONS

- Process control
- Compressor control
- Filter status
- Duct or building static pressure
- Damper and fan control

SPECIFICATIONS

Service: Compatible liquids and gases.
Wetted Materials: 316L SS.
Housing: Polycarbonate.
Accuracy: ±1% of FS including linearity, hysteresis, and repeatability (indicator and transmitter).
Stability: < ±2% of FS per year.
Pressure Limits: 1.5 x range.
Temperature Limits: Ambient: 20 to 140°F (-6.6 to 60°C); Process: 0 to 176°F (-18 to 80°C).
Compensated Temperature Limits: 32 to 122°F (0 to 50°C).
Thermal Effect: ±0.05% of FS/°F.
Display: 4-digit backlit LCD (digits: 0.60˝H x 0.33˝ W).
Power Requirements: 12-30 VDC/AC.
Power Consumption: 2.5 watts.
Electrical Connections: Removable terminal blocks with two 1/2˝ female NPT conduit connections.
Enclosure Rating: Meets NEMA 4X (IP66).
Warm Up Time: <10 s.
Mounting Orientation: Any position.
Weight: 1.18 lb (535 g).
Agency Approvals: CE, UL.

SWITCH SPECIFICATIONS
Switch Type: 2 SPDT relays.
Electrical Rating: 5 A @ 120/240VAC, 1 A @ 30 VDC.
Repeatability: ±1% of FS (switching only).
Set Points: Adjustable 0-100% of FS.
Switch Indication: External LED for each relay on the front panel.
Switch Reset: Manual or automatic.

TRANSMITTER SPECIFICATIONS
Output Signal: 4-20 mA, 1-6 VDC, 1-5 VDC, 0-5 VDC, or 0-10 VDC (direct or reverse output selection).
Minimum Excitation: 14 VDC.
Zero and Span Adjustments: Menu scalable within the range.

MODEL CHART

Example	EDA	W	-N1	E1	-02	T0	-AT	EDAW-N1E1-02T0-AT	Price
Series	EDA							Electronic pressure controller	**$260.00**
Housing		W						Weatherproof	**-**
Process Connection			N1					1/4˝ NPT male bottom	**-**
Electrical Connection				E1				Two 1/2˝ female NPT conduit connections	**-**
Range					02			0-20 psi (1.379 bar)	**-**
					03			0-60 psi (4.14 bar)	**-**
					04			0-100 psi (6.89 bar)	**-**
					05			0-150 psi (10.34 bar)	**-**
					06			0-300 psi (20.68 bar)	**-**
					07			0-600 psi (41.4 bar)	**-**
					08			0-1000 psi (68.9 bar)	**+26.25**
					09			0-1500 psi (103.4 bar)	**+26.25**
					10			0-3000 psi (206.8 bar)	**+26.25**
Transmitter Output						T0		None	**-**
						T1		4-20 mA	**+26.25**
						T2		1-5 VDC	**+26.25**
						T3		0-5 VDC	**+26.25**
						T4		1-6 VDC	**+26.25**
						T5		0-10 VDC	**+26.25**
Options							AT	Aluminum adhesive tag	**+14.75**
							NIST	NIST certificate	**+139.00** Ⓝ
							23444	Oxygen cleaning	**+112.00**

Ⓝ Items are net priced and are not subject to any discount.

ACCESSORIES

Model	Description	Price
A-590	1/2˝ conduit plug, watertight	**$25.00**
A-EDA-BRK	Flush mount bracket for EDA, bracket is then surface mounted, steel with gray hammertone epoxy finish	**34.25**

A-EDA-BRK with EDA installed