Series GWB - Radar Level Transmitter for Solids

Specifications - Installation and Operating Instructions

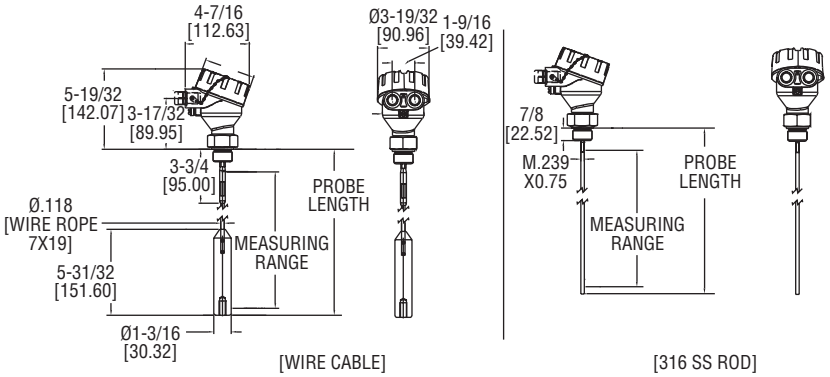

The Series GWB Guided Wave Radar Transmitter for Solids is a level transmitter providing an analog and switching output (4 to 20 mA as well as a NC SPST switch output) to provide continuous level indication of powder and bulk material. The sensor can output level indication as a continuous measurement reading through its analog output, or it can alter that information into freely adjustable switching output signals. State-of-the-art Time Domain Reflectometry technology in this transmitter makes for excellent accuracy and stability. Suppression of disturbance signals allows the GWB to measure precisely even when operating close to interfering structures. This series is available with either a rigid or flexible probe depending on the application installation required, as well as a custom probe length. One of the GWB characteristics is virtually no installation restrictions making it ideal for small tanks, tall and narrow nozzles, and various other types of processing and storage applications. The guided wave radar transmitter for liquids features exceptional performance in liquids with low reflectivity such as oils and hydrocarbons, and factory settings can be configured via HART® Communication protocol.

MOUNTING

Series GWB is mounted vertically to the tank via its connection thread, which is screwed directly into a standard threaded tank connection, i.e. weld-in socket, or it can be screwed into a flange, which is then connected to a tank nozzle (see Figure 1).

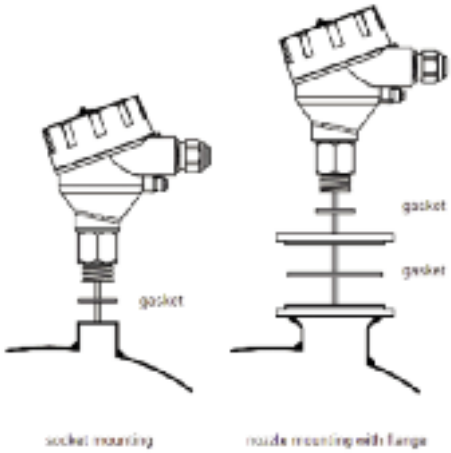

Figure 1: Mounting.

Series GWB should not be welded directly into the tank. Neither should flanges be welded onto Series GWB. Welding on the metal parts of the transmitter will cause serious damage to the sensor.

Do not lift or handle Series GWB by its probe; this can cause excessive stress on the probe connection. Series GWB should be handled by the hexagon or the lower section of the housing.

SPECIFICATIONS

Service: Compatible, non-combustible liquids and gases.
Wetted Materials:
316 SS rod: 316 L SS, PEEK & Klingersil;
316 SS coaxial: 316 L, PEEK & Klingersil C-4400;
Wire cable: 316 SS, PEEK & Klingersil.
Accuracy: ±0.12″.
Repeatability: < 0.08″.
Resolution: < 0.04″.
Dielectric Constant [εr]:
316 SS rod/wire cable: > 1.8;
316 SS coaxial: > 1.4.
Dynamic Viscosity: 316 SS rod/wire cable: < 5.00 mPa s=5.000 cP; 316 SS; Coaxial: < 50 mPa; S=500 cP.
Velocity of Level Change: < 3.2 fps.
Start-Up Time: < 6 s.
Temperature Limits:
Ambient: -13 to 176°F (-25 to 80°C);
Process: -40 to 302°F (-40 to 150°C).
Pressure Limits: -14.5 to 580 psi (-1 to 40 bar).
Output Signal: Analog or switch type.
Analog Output: 4 to 20 mA.
Switch Type: SPST, NC.
Power Requirements: 12 to 30 VDC.
Electrical Rating: 70 mA @ 24 VDC.
Mounting Orientation: Vertical.
Response Time: 0.5 s, 2 s, 5 s selectable.
Electrical Connection: Screwless, cage clamp terminal block for stranded and solid wires AWG 22-14.
Conduit Connection: 1/2″ NP or M20.
Process Connection: 3/4″ male NPT or 3/4″ male G.
Enclosure Rating: NEMA 4X (IP66).
Weight: 2.09 lb (0.95 kg).
Agency Approvals: CE.

DWYER INSTRUMENTS, INC.
P.O. BOX 373 • MICHIGAN CITY, INDIANA 46361, U.S.A.
Phone: 219/879-8000
Fax: 219/872-9057
www.dwyer-inst.com
e-mail: info@dwyer-inst.com

Do not screw in Series GWB by its housing; it should be tightened only via its hexagon (wrench size 1.26 in (32 mm) for connection thread G3/4A).

Tighten the coaxial probe only at its lower hexagon; the upper hexagon of the coaxial probe is not needed for mounting.

It is the responsibility of the customer to ensure proper sealing of the sensor connection; based on the process conditions like temperature, pressure and resistance against the process liquids and atmosphere.

G thread connections require a suitable gasket for pressure-tight joints.
The G3/4A connection thread of Series GWB is supplied with a gasket made of Klingersil C-4400, thickness 0.08 in (2 mm). The suggested tightening torque for this thread size, this type of gasket and a process pressure of max. 40 bar is 25 Nm (580 psi) (maximum permissible torque: 45 Nm).

For NPT thread connections, pressure-tight joints require a sealant directly on the threads.

MOUNTING CONSIDERATIONS
The probe should be installed so that it is not directly impacted by the filling inlet.

It should neither touch nor sway towards other objects inside the tank or the tank/nozzle walls; e.g. by agitator swirls. In applications with very strong movements, which can also cause excessive lateral force on the probe, it is recommended to fix the probe. Anchoring fixtures are available.

For further details about fixing the single rod probe, please refer to the operations manual.

The coaxial probe can be fixed to the tank wall by lateral brackets attached to the wall. Alternatively, a piece of tube attached to the tank bottom can serve as a socket for holding the end of the coaxial probe in place; in this case proper drainage of the socket has to be ensured. Any probe fixtures should only guide the probe and not be tightly fixed, as to allow movement due to thermal expansion.

The single rod is suitable for a very wide range of applications and liquids, but the signal has a wider detection radius around the rod. Thus, it is more responsive for measurement signal disturbances which can be easily overcome by adhering a few mounting considerations (see Figure 2) and making simple configuration adjustments to the sensor. In most cases, it is enough to activate and utilize the powerful disturbance signal suppression features of Series GWB. However, those work most efficiently on stationary interference targets like tall and narrow nozzles or close-by objects. In the case that non-stationary interference targets close to the single rod probe, like slowly rotating agitator blades, cause problems with the measurement, it is recommended to use the coaxial probe.

	316 SS ROD PROBE	
	316 SS COAXIAL PROBE	
nozzle diameter	-[1]	>50mm
nozzle height	-	<300mm
clearance to tank wall or other internal objects	-	>100mm
clearance between probe end and tank bottom	-	>2mm
diameter of bypass chamber / stilling well	-[2]	>25mm

- = no restrictions
[1] enough diameter to fit in the coaxial tube (Ø17.2mm)
[2] enough diameter to fit in the coaxial tube (Ø17.2mm) and enough room around the probe for the liquid to flow in and out of the bypass chamber / stilling well

Figure 2: Mounting Considerations.

In any case, the single rod probe should never be in direct contact with the tank/nozzle wall or other objects in the tank. The coaxial probe does not have restrictions regarding mounting position, tank connection, and proximity to the tank wall or other objects inside the tank.

The coaxial probe is recommended for a non-metallic tank or open pit applications. If that is not possible, a single rod probe can be used when Series GWB is mounted into at least a DN50 metal flange or screwed into a metal sheet with at least 5.91 in (Ø150 mm).

Series GWB is very well suited for external mounting into a bypass chamber. Thus, Series GWB is also the ideal replacement for chamber-mounted displacers: simply remove the displacer, keep its existing chamber and fit a Series GWB into it. The powerful disturbance signal suppression features of Series GWB ensures easy retrofitting and reliable measurement in almost any existing displacer chamber.

For further details about mounting Series GWB into a chamber, please refer to the operations manual.

CABLE ENTRIES AND CABLE GLANDS
The housing has two cable entries and standard screw plugs and cable glands are available. Nevertheless, the customer has to confirm the suitability of those cable glands for the specific application requirements and cabling; and replace them when necessary.

Both cable entries can be fitted with cable glands. In the case where only one cable gland is used, it is recommended to use cable entry D2 (see Fig. 3) and then cable entry D3 has to be closed with a suitable screw plug.

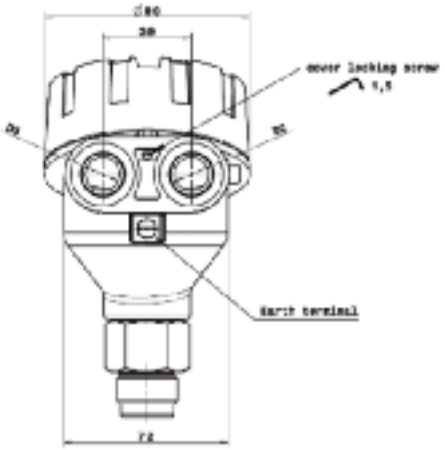

Figure 3: Cable Entries.

IP68-rated screw plugs and cable glands have to be properly sealed and tightened around a cable of suitable type and diameter to ensure the IP68 rating of the housing.

Cable entries with metric threads can be sealed by mounting the suitable screw plug or cable gland with matching rubber washers underneath.

Cable entries with NPT threads require a sealant directly on the thread of the screw plug or cable gland.

For M20x1.5 cable entries, Series GWB comes assembled with the following:
- 1 x cable gland M20x1.5, IP68, nylon PA66, for nonarmoured cable 0.20 to 0.33 in (Ø5…9mm), with EPDM washer, max. tightening torque 6Nm on all hexagons, wrench size 0.94 in (24 mm). For protection during shipment this entry is closed with an EPDM sealing plug which has to be removed for cabling.
- 1 x screw plug, IP68, M20x1,5, nylon PA66, with EPDM washer.

For 1/2″ NPT cable entries, Series GWB comes assembled with the following:
- 2 x screw plug, 1/2″ NPT, PE-LD. They are not IP68 and are only for housing protection during shipment. This must be replaced by the customer.

When wiring with shielded or armoured cable, suitable cable glands have to be used. The contact between the metal housing and the shielding of the cable is made by using a suitable EMC-type cable gland. Ground the shielding of the cable only on the earth terminal on the sensor side; not on the supply side (see Figure 3).

WIRING

First, verify that the power supply for the sensor is switched off.

Establish an equipotential connection (potential equalization) between the external earth terminal of Series GW and the closest ground potential terminal of the tank.

Open the housing cover by turning it counterclockwise. It may be necessary to loosen the cover locking screw with an allen key size 0.06 in (1.5 mm). The cover has a safety chain to prevent it from falling to the ground after being unscrewed (see Figure 4).

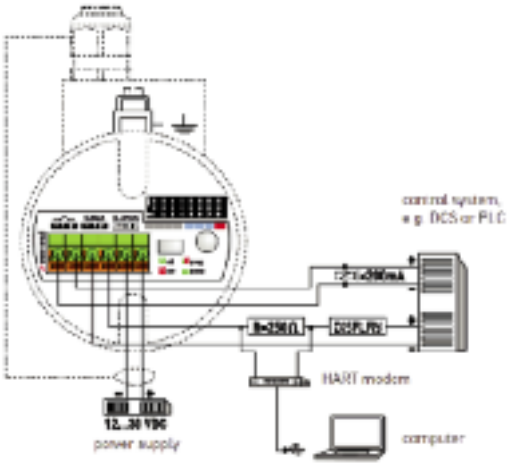

Figure 4: Cable Entries.

The lower sticker on the black plastic cartridge inside the housing gives instructions for the standard M20x1.5 cable gland. When other cable glands are being used, please refer to their specifications.

Loosen the cable gland and pull the cable through the cable gland into the housing. Pull it far enough as to have a convenient length for stripping and handling the cable.

Install cable with a drip loop outside the housing where the bottom of the loop must be lower than the cable entry of the housing.

Dismantle the cable carefully and strip the wires as indicated on the sticker (see Figure 5).

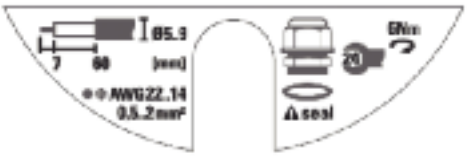

Figure 5: Lower Sticker On the Black Plastic Cartridge.

The stripped wire ends are connected to the sensor electronic via the green screwless, cage clamp terminal block. It can accommodate stranded and solid wires 0,5…2mm² / AWG 22...14. The usage of cable end sleeves with insulation collar is not recommended.

Simply press an orange lever straight down with a small flat tip screwdriver, insert a stripped wire end into the terminal hole, and release the orange lever; the wire is now connected.

The upper sticker inside the housing illustrates the inputs and outputs in the sensor. Connect all wires accordingly.

Pull the cable back, but make sure its mantle does not retract into the cable gland. Tighten the cable gland to ensure proper sealing function.

Switch on the power supply for the sensor.

The sensor LED should start blinking green within 6 seconds after connecting the power (during this start-up time the LED is off). The blinking green LED indicates that the sensor is in measuring mode and working correctly.

Do not tighten the housing cover yet. Some basic configuration is still to be done.

Series GW's electronic is galvanically completely insulated from its inputs/outputs and the tank potential; thus avoiding any problems from electrochemical corrosion protection of the tank.

For further details about this feature, please refer to the operations manual.

CONTROL ELEMENTS

Basic configuration of Series GWB can be done directly on the device via three control elements: a DIP switch, a single push button and a LED for visual feedback. All settings required to get Series GWB fully operational can be performed directly on the device or Series GWB can be ordered completely pre-configured.

All three control elements are enclosed in the black plastic cartridge inside the housing.

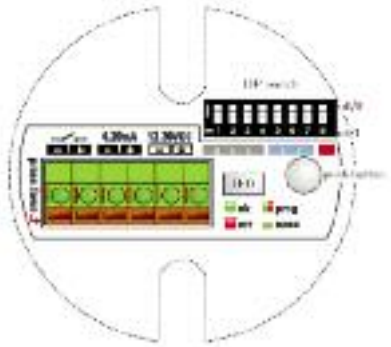

Figure 6: Control Elements.

The DIP switch has 8 small white levers. Small numbers from 1 to 8 are printed underneath the levers: they indicate the DIP switch positions and correspond to the ones in Figure 7.

DIP SWITCH POSITION	1	2	3	4	5	6	7	8	
DIP SWITCH SETTINGS									DESCRIPTION
	0	0	0	0	0	0	0	0	measuring mode
	0	0	0	0	0	0	0	1	configuration mode
FUNCTION GROUP 1									ANALOG CURRENT OUTPUT
	0	0	0	1	0	0	1	1	lower range value [4mA]; span 0%
	0	0	1	0					upper range value [20mA]; span 100%
	0	1	0	0					response time 0.5s [default]
	0	1	0	1					response time 2s
	0	1	1	0					response time 5s
FUNCTION GROUP 2									SWITCHING OUTPUT
	0	0	1	0	0	1	0	1	lower threshold
	0	0	1	1					upper threshold
	0	1	0	0					NC [default]
	0	1	0	1					NO
FUNCTION GROUP 3									DISTURBANCE SIGNAL SUPPRESSION
	0	0	0	1	0	1	1	1	perform disturbance signal scan
	0	0	1	0					disturbance signal scan: utilize [default]
	0	0	1	1					disturbance signal scan: do not utilize
	0	1	0	0					upper dead band: short [default]
	0	1	0	1					upper dead band: medium
	0	1	1	0					upper dead band: long
	1	0	0	0					amplitude threshold: low [default]
	1	0	0	1					amplitude threshold: medium
	1	0	1	0					amplitude threshold: high
	1	1	0	0					coaxial probe
	1	1	0	1					single rod probe
FUNCTION GROUP 4									RESET
	0	0	0	1	1	0	0	1	reset to delivery configuration
FUNCTION GROUP 5									MEASURE PROBE LENGTH
	0	0	0	1	1	0	1	1	measure probe length

[1] for single rod and wire rope probes with a probe length [L] >3.000mm the default setting is disturbance signal scan: do not utilize.
[2] for single rod and wire rope probes with a probe length [L] >3.000mm the default setting is upper dead band: long.

Figure 7: DIP Switch Settings.

The upper position of a lever is off/0 and the lower position is on/1. On the left side of the DIP switch is also a small indication of the on/1 position.

The off/0 and on/1 states of the DIP switch correspond to the 0/1 indications in Figure 7.

The upper sticker on the black plastic cartridge shows three color segments close to the DIP switch: red, gray, and blue; they correspond to the colored rows in Figure 7.

- Red: Indicates DIP switch position 8 which switches between measuring and configuration mode. Only when the DIP switch position 8 is on/1, can the Series GWB be configured; configuration mode is indicated by the LED

blinking alternately green and red. When DIP switch position 8 is off/0, Series GWB is in measuring mode, which is indicated by the LED blinking green.

It is only possible to enter the configuration mode when DIP switch positions 1 to 7 are off/0 before setting DIP switch position 8 to on/1; otherwise the LED will be blinking red to indicate an error.

• Blue: Indicates the DIP positions through which groups of functions are selected, e.g. all functions related to the analog current output or the switching output.

• Gray: Indicates the DIP positions through which individual functions/configuration settings are selected.

After setting all DIP switch positions to represent the 0/1 sequence of the desired function (as described in Figure 2), the push button has to be pressed to execute the desired function. Execution of the function is indicated by the LED remaining green until the function has been properly executed, in which case the LED returns to blinking alternately green and red.

Function groups 4 and 5 require the push button to be pressed and held for at least 10 seconds for the functions to be executed.

CONFIGURATION SINGLE ROD PROBE

For most standard applications, executing the three basic configuration steps below is sufficient to achieve a fully functional sensor and providing a continuous level measurement through its analog current output.

For further details and advanced configuration of Series GWB, please refer to the operations manual.

1. PERFORM DISTURBANCE SIGNAL SCAN

- Series GWB has to be mounted in its final position and the tank has to be completely empty in order to perform a disturbance signal scan.
- Set the DIP switch positions to the 0/1 sequence in Figure 8 on the left; **(start from position 8 and move towards position 1!)**
- The LED will blink alternately green and red.
- Press the push button.
- The LED will remain green for a few seconds while the disturbance signal scan is being performed.
- Once the scan is completed successfully, the LED will return to blinking alternately green and red.

2. LOWER RANGE VALUE [4 mA]; SPAN 0%

- Fill the tank up to the level where you want to position the lower range value [4 mA]; span 0%.
  It is recommended that the lower range value stays within the measuring range [M] (see Figure 15).
- Change DIP switch position 6 to off/0.
- Press the push button.
- The LED will remain green briefly while the lower range value setting is being executed.
- Once it has been executed successfully, the LED will return to blinking alternately green and red.

3. UPPER RANGE VALUE [20 mA]; SPAN 100%

- Fill the tank up to the level where you want to position the upper range value [20 mA]; span 100%.
  It is recommended that the upper range value stays within the measuring range [M] (see Figure 15).
- Change DIP switch position 3 to on/1.
- Press the push button.
- The LED will remain green briefly while the upper range value setting is being executed.
- Once it has been executed successfully, the LED will return to blinking alternately green and red.
- Set all the DIP switch positions to 0 as indicated in figure 10 on the left; **(start from position 1 and move towards position 8!)**
- The LED will change to blinking green.

Tighten the housing cover properly by turning it clockwise and ensure the cover safety chain does not tangle up. If desired, tighten the cover locking screw with an allen key size 0.06 in (1,5 mm).

CONFIGURATION COAXIAL PROBE

The coaxial probe has a very robust and reliable measurement performance in almost any application without further configuration. For basic configuration only the range values for the analog current output have to be set.

For further details and advanced configuration of Series GWB, please refer to the operations manual.

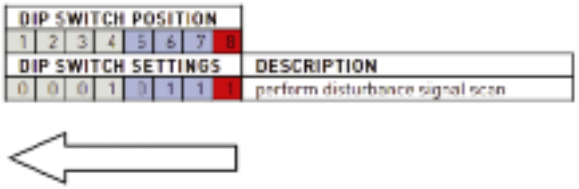

Figure 8: Perform Disturbance Signal Scan.

Figure 9: Lower Range Value (4 mA); Span 0%.

Figure 10: Upper Range Value (4 mA); Span 100%.

Figure 11: Measuring Mode.

1. LOWER RANGE VALUE [4 mA]; SPAN 0%

- Set the DIP switch positions to the 0/1 sequence in Figure 12 on the left; **(start from position 8 and move towards position 1!)**
- Fill the level where you want to position the lower range value [4 mA]; span 0%.
  It is recommended that the lower range value stays within the measuring range [M] (see Figure 15).
- Press the push button.
- The LED will remain green briefly while the lower range value setting is being executed.
- Once it has been executed successfully, the LED will return to blinking alternately green and red.

2. UPPER RANGE VALUE [20 mA]; SPAN 100%

- Raise the liquid inside the tank up to the level where you want to position the upper range value [20 mA]; span 100%.
  It is recommended that the upper range value stays within the measuring range [M] (see Figure 15).
- Change DIP switch position 3 to on/1.
- Press the push button.
- The LED will remain green briefly while the upper range value setting is being executed.
- Once it has been executed successfully, the LED will return to blinking alternately green and red.
- Set all the DIP switch positions to 0 as indicated in Figure 14 on the left; **(start from position 1 and move towards position 8!)**
- The LED will change to blinking green.

Tighten the housing cover properly by turning it clockwise; and ensure the cover safety chain does not tangle up. If desired, tighten the cover locking screw with an allen key size 0.06 in (1,5 mm).

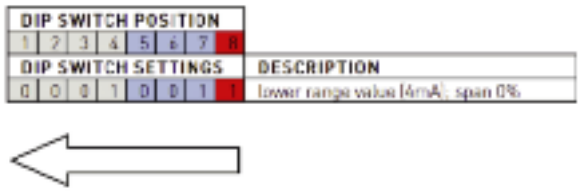

Figure 12: Lower Range Value (4 mA); Span 0%.

DIP SWITCH POSITION								
1	2	3	4	5	6	7	8	
DIP SWITCH SETTINGS								DESCRIPTION
0	0	1	0	0	0	1	1	upper range value [20mA], span 100%

Figure 13: Upper Range Value (4 mA); Span 100%.

DIP SWITCH POSITION								
1	2	3	4	5	6	7	8	
DIP SWITCH SETTINGS								DESCRIPTION
0	0	0	0	0	0	0	0	measuring mode

Figure 14: Measuring Mode.

PROBE LENGTH AND MEASURING RANGE

The reference point for definition of the probe length [L] (see Figure 15) is always the sealing surface of the connection thread. The probe length [L] is an important mechanical dimension which is necessary in order to ensure the probe physically fits into the tank at the anticipated mounting location; but is not equal to the actual measuring range [M] of the sensor!

Series GWB level sensors have small inactive areas at top [I1] and bottom [I2] of the probe. Those are due to the presence of unavoidable signal disturbances at both ends of the probe. In these inactive areas the measurements are non-linear or have reduced accuracy.

Therefore, it is not recommended to actually measure level within those inactive areas. Their length depends on the probe type and the reflectivity (i.e. dielectric constant) of the liquid to be measured.

The measuring range [M] of Series GWB extends between the top and bottom inactive areas of the probe; this is the area in which Series GWB will have the specified measurement performance. It is recommended that the maximum and minimum liquid levels to be measured in the tank are actually within the measuring range [M] of the sensor. The span between the lower range value [4 mA] and the upper range value [20 mA] of the analog current output is equal to 0...100% of your continuous level measurement reading. It is recommended that the span between those two range values stays within the measuring range [M].

DISTURBANCE SIGNAL SCAN

The disturbance signal scan is a powerful disturbance signal suppression feature of Series GWB. The sensor scans its entire probe length for any disturbance signals in the application that could potentially be misinterpreted as level readings, memorizes and suppresses them during operation; that way Series GWB only recognizes the actual level signals caused by the liquid to be measured.

The disturbance signal scan is intended for the single rod probe, since its signal has a wider detection radius around the rod, making it more responsive for measurement signal disturbances.

The disturbance signal scan works most efficiently on stationary interference targets like tall and narrow nozzles or close-by objects. Thus, Series GWB has to be mounted in its final position and the tank has to be completely empty in order to perform a disturbance signal scan; that will ensure a reliable identification of the actual disturbance signals only. In case that nonstationary interference targets close to the single rod probe, like slowly rotating agitator blades or streams of liquid being filled into the tank, cause problems with the measurement, it is recommended to use the coaxial probe.

Performing a disturbance signal scan is the prerequisite for utilizing this feature of Series GWB.

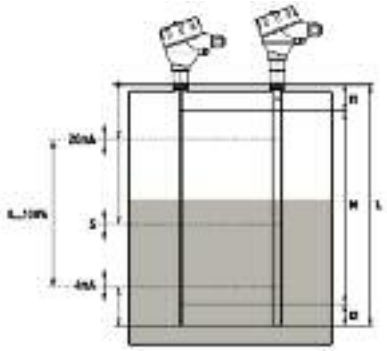

Figure 15: Probe Length and Measuring Range.

Probe Type Recommendations

	WIRE CABLE PROBE	316 SS ROD PROBE	316 SS COAXIAL PROBE
PROBE MOUNTING			
Tall & narrow nozzles	+	+	+
Difficult tank or nozzle geometries	+	+	+
Close to internal tank structures or tank wall	+	+	+
Probe might touch or touch internal tank structures/tank wall	+	+	+
Liquid splashes, slowly touch probe, cover the liquid surface	+	+	+
Non-stationary interface targets, e.g. agitator blades	+	+	+
Measurement readings at the very top or bottom of the tank	+	+	+
Non-metallic tanks	+	+	+
Bypass chambers and stilling wells	*	+	-
Limited headroom for installation	*	+	+
Tall tanks	*	+	+
MEDIA CHARACTERISTICS			
Bulk solids	-	-	+
Measuring low reflectivity liquids (i.e. low dielectric constant)	+	+	+
Viscous, crystallizing, adhesive, coating, or sticky liquids	-	+	+
Fibrous liquids, sludge, slurry, pulp	-	+	+
Liquids containing solid particles	-	+	+
Close-reality of probe is important	-	+	+

\+ Recommended

* Possible, maybe with configuration and/or mounting adjustments

\- Not recommended

MAINTENANCE/REPAIR

Upon final installation of the Series GWB, no routine maintenance is required. The Series GWB is not field serviceable and should be returned if repair is needed. Field repair should not be attempted and may void warranty.

WARRANTY/RETURN

Refer to “Terms and Conditions of Sales” in our catalog and on our website. Contact customer service to receive a Return Goods Authorization number before shipping the product back for repair. Be sure to include a brief description of the problem plus any additional application notes.

Printed in U.S.A. 8/11

FR# R4-443924-00 Rev. 1

DWYER INSTRUMENTS, INC.
P.O. BOX 373 • MICHIGAN CITY, INDIANA 46361, U.S.A.

Phone: 219/879-8000
Fax: 219/872-9057

www.dwyer-inst.com
e-mail: info@dwyer-inst.com