PADDLE LEVEL SWITCH

3 Sensitivity Settings, Top or Side Mounting

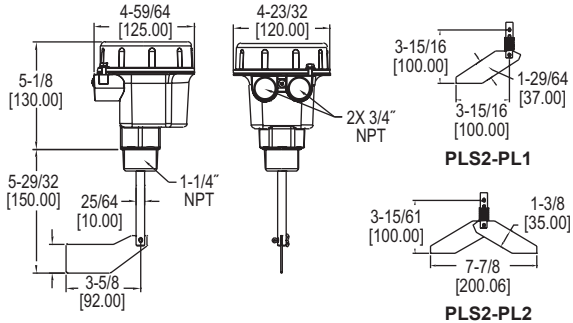

The **Series PLS2 Paddle Level Switch** is an electromechanical level switch designed for level monitoring of bulk materials. The rotating measuring vane is driven by a brushless synchronous motor at one revolution per minute and as product builds up, the paddle rotation is impeded and the resulting motor torque activates the output switch and stops the motor. The PLS2 is designed with the industry standard 1-1/4″ male NPT connection and unit can be side or top mounted.

FEATURES/BENEFITS

- Torque adjusting mechanism eliminates the need for different sized paddles
- 3 sensitivity settings for spring force can be set for light to very sticky materials
- Brushless synchronous motor assures long term reliability and efficiency
- Motor shuts ceases operation when paddle stalls
- Screw cover for easy access with no worries about losing bolts or screws
- Top or side mountable for added installation flexibility
- Unaffected by the dielectric constant of the sensed material, making it superior to a capacitance level switch for applications where the dielectric constant is too low, where there is more than one material being used in one vessel, and when material moisture content can change

APPLICATIONS

- Mining
- Food and beverage
- Silos
- Hoppers

SPECIFICATIONS

Service: Dry powder or bulk materials compatible with wetted materials.
Wetted Materials: Paddle: 304 SS; Exposed shaft: 303 SS; Shaft seal: NBR; Process connection: Aluminum.
Temperature Limits: Process: -13 to 176°F (-25 to 80°C); Ambient: -4 to 140°F (-20 to 60°C).
Pressure Limit: 11.6 psi (0.8 bar).
Power Requirement: Select by model number: 115 VAC, 230 VAC or 24 VDC.
Power Consumption: AC versions: 4 VA; DC version: 2.5 watt.
Enclosure: Aluminum, powder coated.
Enclosure Rating: NEMA 4 (IP66); Rated for Class II & III, Div. 1, Group E, F, G.
Switch Type: SPDT micro switch.
Electrical Rating: 5 A @ 250 VAC, 3 A @ 30 VDC.
Electric Connections: Screw terminals.
Conduit Connection: 3/4″ female NPT.
Process Connection: 1-1/4″ male NPT.
Mounting Orientation: Side or top mounting.
Sensitivity: Min. material density of 6 lb/ft³ (96 kg/m³).
Permitted Mechanical Loading: Standard shaft: 67 lbf (300 N) max; Optional extension: 22 lbf (100 N) max.
Weight: 2.6 lb (1.2 kg).
Agency Approvals: CE, FM.

MODEL CHART

Model	Description	Price
PLS2-E-1-1	Explosion-proof paddle level switch, 115 VAC power supply	**$224.00**
PLS2-E-1-2	Explosion-proof paddle level switch, 230 VAC power supply	**224.00**
PLS2-E-1-3	Explosion-proof paddle level switch, 24 VDC power supply	**241.00**

Note: Models include single sided non-spring paddle.

ACCESSORIES

Model	Description	Price
PLS2-PL1	Single sided spring paddle	**$95.00** Ⓑ
PLS2-PL2	Double sided spring paddle	**89.50** Ⓑ
PLS2-EX1	8.5″ shaft extension	**86.50** Ⓑ
PLS2-EX2	19.6″ shaft extension	**132.00** Ⓑ
PLS2-EX3	39.4″ shaft extension	**156.00** Ⓑ
PLS2-EX4	78.7″ shaft extension	**243.00** Ⓑ

Ⓑ Items are subject to Schedule B discounts.