Series A3000

Photohelic® Pressure Switch/Gages

3-in-One Indicating Gage, Lo-Limit and Hi-Limit Control

Set points are instantly adjusted with front knobs.

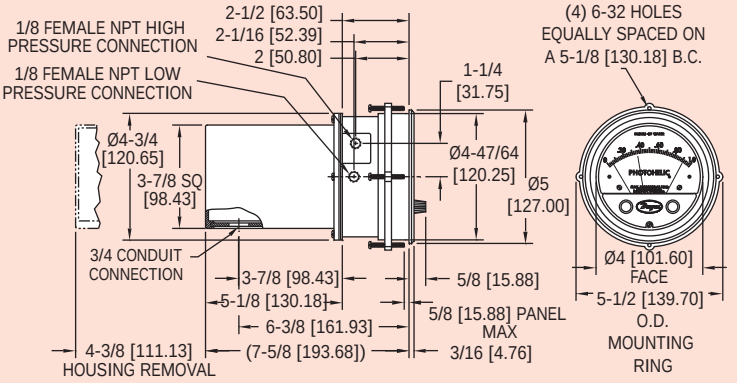

Photohelic® Switch/Gages function as versatile, highly repeatable pressure switches combined with a precise pressure gage employing the time-proven Magnehelic® gage design. The Photohelic® gage measures and controls positive, negative or differential pressures of air and compatible gases. Standard models are rated to 25 psig (1.7 bar) with options to 35 (2.4) or 80 (5.5 bar) psig. Single pressure 36000S models measure to 6000 psig (413 bar) with a 9000 psig (620 bar) rating.

Two phototransistor actuated, DPDT relays are included for low/high limit control. Easy to adjust setpoint indicators are controlled by knobs located on the gage face. Individual setpoint deadband is one pointer width – less than 1% of full scale. Setpoints can be interlocked to provide variable deadband – ideal for control of fans, dampers, etc. Gage reading is continuous and unaffected by switch operation, even during loss of electrical power. Choose from full scale pressure ranges from a low 0-.25" (0-6 mm) w.c. up to 30 psi (21 bar); single positive pressure to 6000 psig (413 bar).

Photohelic Sensing - How It Works

In typical applications, these Dwyer switch/gages control between high and low pressure set points. When pressure changes, reaching either set point pressure, the infrared light to the limiting phototransistor is cut off by the helix-driven light shutter. The resulting phototransistor signal is electronically amplified to actuate its DPDT slave relay and switching occurs. Dead band between make and break is 1% of full scale or less — just enough to assure positive, chatter-free operation.

Relay - Transformer Features

A plastic housing protects all electronic components. Solid-state and integrated circuit electronics are on glass-epoxy printed circuit boards and self-extinguishing terminal boards.

APPLICATIONS - PHOTOHELIC® SWITCH/GAGES

In both series of pressure switch/gages, you get the convenience of a visual indication plus high-low limit switching. For both OEM and in-plant applications, the Photohelic® switch/gage is used to control pressures in air conditioning systems, clean rooms, fluidic and pneumatic control systems, materials handling equipment, alarm or control fume exhaust systems, control pressure in air structures, and monitor respiratory and blood pressures.

Standard Model

Two phototransistor-actuated circuits and two DPDT relays permit both high and low alarms or limit controls. Relays are de-energized when gage pointer is to the left of respective set points; relays are energized as pointer passes to the right of set points. Loss of electrical power or loss of pressure provide "fail safe" protection.

High and Low Latching Circuits

Dwyer Photohelic® switch/gages can be wired for **high-latching, low-latching** or combination **high-low latching** circuits. That is, the equipment will hold in these respective positions once activated and until manually reset. This can be particularly useful for alarm and signal applications where control is accomplished by another Photohelic® switch/gage or other means. Complete wiring and operational instructions are included. Where manual reset is required a dry circuit push button such as Dwyer Part A-601 should be used.

SPECIFICATIONS

GAGE SPECIFICATIONS

Service: Air and non-combustible, compatible gases.
Wetted Materials: Consult factory.
Accuracy: ±2% of full scale at 70°F (21.1°C). ±3% on -0 and ±4% on -00 models.
Pressure Limits: -20˝ Hg. to 25 psig (-0.677 to 1.72 bar). MP option; 35 psig (2.41 bar), HP option; 80 psig (5.52 bar). A36003S – 36010S; 150 psig (10.34 bar). A36020S and higher; 1.2 x full scale pressure.
Temperature Limits: 20 to 120°F (-6.67 to 48.9°C). Low temperature option available.
Process Connections: 1/8˝ female NPT.
Size: 4˝ (101.6 mm) dial face, 5˝ (127 mm) O.D. x 8-1/4˝ (209.55 mm).
Weight: 4 lb (1.81 kg).

SWITCH SPECIFICATIONS

Switch Type: Each setpoint has 2 form C relays (DPDT).
Repeatability: ±1% of full scale.
Electrical Rating: 10A @ 28 VDC, 10A @ 120, 240 VAC.
Electrical Connections: Screw terminals. Use 167°F (75°C) copper conductors only.
Power Requirements: 120 VAC, 50/60 Hz; 240 VAC & 24 VAC power optional.
Mounting Orientation: Diaphragm in vertical position. Consult factory for other position orientations.
Set Point Adjustment: Adjustable knobs on face.
Agency Approvals: UL, CSA, CE. Optional-EXPL explosion-proof enclosure does not possess any agency approvals.

OPTIONS

Single contact, right set point, for actuation on increasing or decreasing pressure.
OEM Model, less relay and transformer components and housing but including infrared diodes and phototransistor(s), light shutter and set pointer(s). For single or double contact.
Remote-Mounted Relay, relay pack may be mounted remotely from gage. Standard length is 5 ft. For other lengths, specify cable length required.
Tamper-proof knobs, low temperature option, special scales, voltages and other features and modifications are available.
Special Housings available include Weatherproof (NEMA 4) and Explosion-proof (NEMA 7 CD, 9 EFG; NEC Class I, DIV. 1 & 2, Groups C, D, Class II, Div. 1 & 2, Groups E, F, G, Class III.) Contact Customer Service for detailed dimension drawings.

Check these features for dependable control

Bezel and front cover (with set point knobs and zero adjustment screw) removed to expose Photohelic® gage set point mechanism. Cover is clear polycarbonate plastic.

Gage pointer and light shutter are mounted on helix and balancing counterweight. Shutter passes through slot in optical limit switch to expose phototransistors to integral infrared light source or mask them depending on applied pressure.

Light shield effectively protects phototransistors from strong outside light sources yet allows free pointer movement. It also gives interior a clean "finished" look.

Optical limit switches are used for reliability and long service life. Attached directly to set pointers, they are individually aligned to assure precise switching accuracy.

Semi-Flexible drive shaft connects to set point knobs.

Zero adjustment screw connects to screw in cover to adjust zero pressure reading.

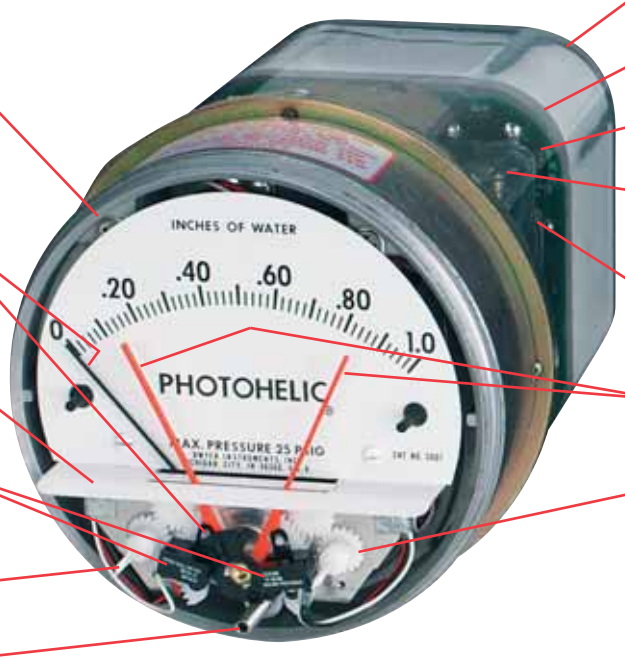

Plastic enclosure protects electronic components and electrical connections.

Polycarbonate connection or terminal board is self-extinguishing.

Glass-epoxy printed circuit boards for durability and performance.

Load relays are DPDT with latching feature for maximum application versatility.

Electronics are designed to operate on 50/60 Hz, 120 volt current with 10% over or under voltage. Special units for other voltages are available.

Switch set pointers show switch settings at all times.

Spring loaded friction clutch prevents operator damage of set point mechanism.

Models and Ranges - Series A3000 Photohelic® Switch/Gages

Note: Special models can be built to OEM customers' specifications with scales reading in special pressure units like ounces per square inch, inches of mercury, etc. Square Root Scales reading in FPM or SCFM are also available. Custom logos and special graduations can also be included. Contact factory for minimum quantities and pricing.

Model	Range, In W.C.	Price
A3000-00	0-.25	$269.00
A3000-0	0-.50	255.00
A3001	0-1.0	255.00
A3002	0-2.0	255.00
A3003	0-3.0	255.00
A3004	0-4.0	255.00
A3005	0-5.0	255.00
A3006	0-6.0	255.00
A3008	0-8.0	255.00
A3010	0-10	255.00
A3015	0-15	255.00
A3020	0-20	255.00
A3025	0-25	255.00
A3030	0-30	255.00
A3040	0-40	255.00
A3050	0-50	255.00
A3060	0-60	255.00
A3080	0-80	255.00
A3100	0-100	255.00
A3150	0-150	255.00
Bi-Directional Range		
A3000-00N	.05-.20	$269.00

Zero Center Ranges		
Model	Range, In W.C.	Price
A3300-0	.25-0-.25	$269.00
A3301	.5-0-.5	262.00
A3302	1-0-1	262.00
A3304	2-0-2	262.00
A3310	5-0-5	262.00
A3320	10-0-10	262.00
A3330	15-0-15	262.00
Model	Range In W.C. /Air Velocity, F.P.M.	Price
A3000-00AV	0-.25/300-2000	$269.00
A3000-0AV	0-.50/500-2800	255.00
A3001AV	0-1.0/500-4000	255.00
A3002AV	0-2.0/1000-5600	255.00
A3010AV	0-10/2000-12500	255.00

Pitot tube required

Model	Range, MM W.C.	Price
A3000-6MM	0-6	$269.00
A3000-10MM	0-10	255.00
A3000-25MM	0-25	255.00
A3000-50MM	0-50	255.00
A3000-80MM	0-80	255.00
A3000-100MM	0-100	255.00
Zero Center Ranges		
A3300-20MM	10-0-10	$262.00
A3300-30MM	15-0-15	262.00
Zero Center Ranges		
A3300-4CM	2-0-2	$262.00
A3300-10CM	5-0-5	262.00
A3300-30CM	15-0-15	262.00
Model	Range, Pascals	Price
A3000-60PA	0-60	$269.00
A3000-125PA	0-125	255.00
A3000-250PA	0-250	255.00
A3000-500PA	0-500	255.00
A3000-750PA	0-750	255.00

Zero Center Ranges		
Model	Range, Pascals	Price
A3300-250PA	125-0-125	$262.00
A3300-500PA	250-0-250	262.00
Model	Range, Kilopascals	Price
A3000-1KPA	0-1	$255.00
A3000-1.5KPA	0-1.5	255.00
A3000-2KPA	0-2	255.00
A3000-3KPA	0-3	255.00
A3000-4KPA	0-4	255.00
A3000-5KPA	0-5	255.00
A3000-8KPA	0-8	255.00
A3000-10KPA	0-10	255.00
A3000-15KPA	0-15	255.00
A3000-20KPA	0-20	255.00
A3000-25KPA	0-25	255.00
A3000-30KPA	0-30	255.00
Zero Center Ranges		
A3300-1KPA	.5-0- .5	$262.00
A3300-3KPA	1.5-0-1.5	262.00

OPTIONS & ACCESSORIES - Add options as a suffix. Example: A3001-LT

-SRH, Single Relay Activates on Increase .**N/C**
-SRL, Single Relay Activates on Decrease **N/C**
-OLS, OEM model . . . . . .**N/C**
-RMR, Remote mounted relay . . . . .**add 50.50**
-TAMP, Tamper proof knobs . . . . . .**add 10.50**
-MP, Medium pressure . . . . . .**add $37.50**
-HP, High pressure . . . . . .**add 107.00**
-LT, Low temperature (-20°F) . . . . . .**add 10.00**
A-298, Flat Flush Mounting Bracket **26.75**
A-601, Manual reset switch net **34.50**