SCC OPEN SIGNAL Family
Model SCC-C/V Single Channel Module

NOTE: THIS IS A FACTORY CONFIGURED UNIT

FACTORY CONFIGURATION

Each SCC-C/V unit is configured and calibrated at the factory for the input signal range and voltage output range printed by the factory on the SCC unit's side-label.

The above input signal range is ONE of FIVE ranges the unit is capable of accommodating.. The unit provides a 0 to 5V, 1 to 5V, 0 to 10V, ±5V, or ±10V output signal. Unit re-configuration requires SC Configuration Utility.

This SCC unit may be reconfigured by a user at any time via their personal computer (PC) or handheld personal computer (HPC) by installing Dwyer Instrument's Windows®/PC or Windows®/CE HPC based SC Configurator Utility, interfacing the SCC unit to the computer's RS-232C comm port with an MSF Configuration Cable, and then changing the unit's input/output configuration settings.

OPERATIONAL DESCRIPTION

The SCC family of single channel signal conditioning and isolating modues are intelligent, user programmable, high-accuracy, user friendly, signal conditioning units.

Each SCC model supports one (1) specific analog signal-type on its input channel and outputs one (1) high-level current or voltage signal depending upon model. A diverse MSC model family permits users to select the model which meets their unique signal conditioning needs.

SCC models may be purchased with a factory preset configuration for plug-n-play application or custom onfigured to meet their unique need. All SCC models may be configured/reconfigured by a user at anytime through use of an optional SC Configuration Package.

Theory of Operation - An analog world input signal arriving at the SCC unit is isolated, filtered, amplified, scaled and/or linearized (as required) by the units onboard microprocessor under the direction of the unit's configuration parameters set by the user (or factory) via Windows®/PC or Windows®/CE HPC (Handheld Personal Computer) based SC Configurator Utility.

The conditioned signal is then converted to a high level analog current or voltage output signal (depending upon model) and presented at the unit's isolated output.

REQUIREMENTS

Mandatory:

- 15 - 32VDC, 30mA external supply voltage

Optional:

- SC Configuration Package (Part No. SCC-CC-A1) Package consists of: SC Configurator Utility and SCC Configuration Cable.

INSTALLATION

1. Mount SCC unit on standard TS32 or TS35 DIN rail.
2. *See wiring diagram on reverse side.* Connect external 15 to 32VDC power source to SCC unit:
   Positive (+) to SCC terminal +VDC
   Negative (-) to SCC terminal -VDC
3. Connect input current device to SCC unit:
   Positive (+) to SCC terminal +C/V IN
   Negative (-) to SCC terminal -C/V IN
4. Connect output actuator/device to SCC unit:
   Positive (+) to SCC terminal +OUT
   Negative (-) to SCC terminal -OUT

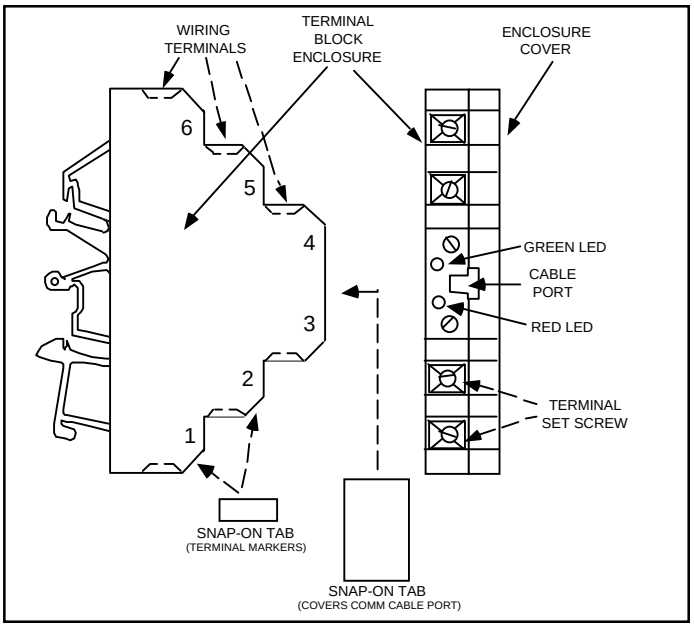

DIAGNOSTIC TOOLS

Two LEDs one RED and one GREEN are located on the front face of the SCC's enclosure and provide user with visual indication as to unit operation.

LED FUNCTIONALITY

LED's have three operational states:

Steady ON
Steady OFF
Blinking

Condition: GREEN = BLINKING
RED = Steady OFF
Meaning: Module is processing data.

Condition: GREEN = Steady ON
RED = Steady ON
Meaning: 1) Configuration data is not loaded in module memory. -OR- 2) During module re-configuration both LED's are normally ON indicating data is being properly transferred to or from module memory.

Condition: GREEN = BLINKING
RED = BLINKING
Meaning: The measured input signal is outside the modules configured range. When the signal is within configured range the LED's indicate normal operation.

All other combinations indicate the module is not operating correctly.

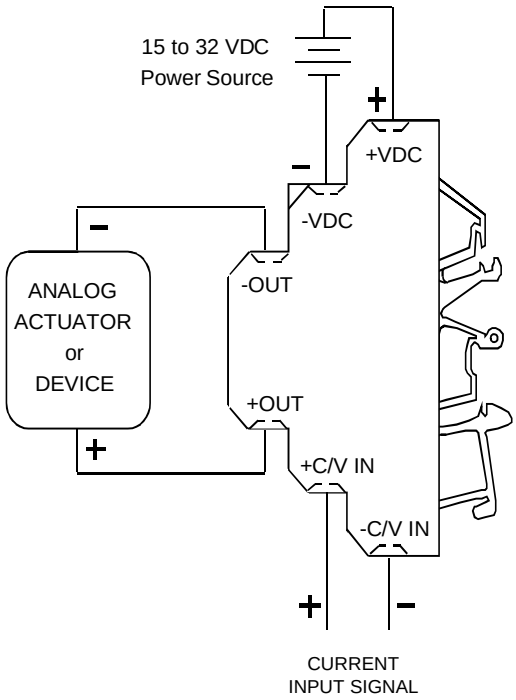

SCC-C/V Wiring Diagram

CONFIGURATION CHANGE

An SCC's configuration can only be changed through use of a personal computer running our Windows®based SC Configurator Utility and a special configuration communication cable to interface the SCC unit and personal computer together. (See Requirements - on reverse side for purchasing information.)

Instructions on how to accomplish configuration change are included with SC Configuration Utility and not covered here.

Warning: This unit is protected against abnormally high and low voltages. Marginally low voltages, marginally high voltages and power fluctuations for extended periods of time can cause permanent damage.

Caution: When installing the unit's wiring do not over-tighten the wiring terminal set screws. Turn set screw until wire's resistance is encountered and wire is securely captured. Over tightening will cause damge to the unit.

Recommended torque: 1. in/lbs

SPECIFICATIONS

Input Power: 15-32Vdc
Isolation: 3 way input, output and power, 1500V peak
Over Voltage: 240VRMS continuous
Step Response to 99%: 0.3 seconds
Operating Temp.: -40 to +75°C
Storage Temp.: -40 to +85°C
Mounting: 32 and 35mm DIN Rail & G Rail
Dimensions: 75mm H X 12.2mm W X 60 mm D (2.95" X 0.485" X 2.5"), 24 modules can be installed per linear foot of DIN Rail
Diagnostics LEDs: Active and alarm indications
Maximum Wire Size: 14 AWG
Input Type: Current
Input Range: (Fully scalable to user input specifications)

Current Input:

0 to 20mA	±10mA
0 to 10mA	±20mA
4 to 20mA	

Accuracy: ±0.05%
Output:

Voltage: 0 to 5V	0 to 10V
±5V	±10V
1 to 5V	

F.C.C. STATEMENT -- This equipment has been tested and found to comply with the limits for a Class B digital device, pursuant to part 15 of the FCC Rules. These limits are designed to provide reasonable protection against harmful interference in a residential installation. This equipment generates, uses and can radiate radio frequency energy and, if into installed and used in accordance with the instructions, may cause harmful interference to radio communications. However, there is no guarantee that interference will not occur in a particular installation. If this equipment does cause harmful interference to radio or television reception, which can be determined by turning the equipment off and on, the user is encouraged to correct the interference by one or more of the following measures: (1) Reorient or relocate the receiving antenna; (2) Increase the separation between the equipment and receiver; (3) Connect the equipment into an outlet on a circuit difference from that to which the receiver is connected; (4) Consult the dealer or an experienced radio/TV technician for help.

INSTALLATION AND SAFETY GUIDANCE NOTES

Environment - Dwyer Instruments, Inc. products are designed to operate reliably and safely in their specified environment. However the following guidelines must be followed to ensure Safety, Electromagnetic Compatibility and Performance.

- Products have been tested for the Industrial Environment (BS EN 50081-2 and 50082-2) unless otherwise stated. Operation in any other environment is not guaranteed and at the risk of the User.
- The User is required to suppress high energy transients, such as those caused by lightning strikes, unless the product is specified for such purposes. Non-resistive loads and contact arcing must be suppressed at source.
- Products are intended for installation inside an equipment cabinet or suitable enclosure unless otherwise specified. This should be accessible only to qualified personnel during commissioning and maintenance. Open chassis products for use above 50V should only be accessible by the removal of a cover using a key or tool.
- Anti-static precautions and conventional Instrumentation best practice must always be observed. Each active module should be protected by a suitably rated fuse or equivalent protection device.

Product EMC Performance - The performance of Dwyer Instruments, Inc. products that fall within the scope of the EMC directive will meet the requirements of the relevant performance criteria as determined by the particular tests listed in the EMC standards. Products may temporarily be affected by the application of some electromagnetic disturbances but will return to published specification thereafter. Individual product details on request.

Directives - Dwyer Instruments, Inc. products are intended for installation by qualified personnel into a larger piece of equipment or system and are not accessible by the operator or that equipment or system under normal use. They do not contain any moving parts as defined by the Machinery Directive and do not fall within the scope of either the Machinery Directive or the Low Voltage Directive unless other stated. The responsibility for the final equipment or system lies with the builder of that equipment or system. It is the duty of the system designer or installation engineer to ensure that our products are used in accordance with our instructions and that current safety, wiring and other relevant regulations are followed.

For order entry, application, or customer service assistance:

All Prices and Specifications subject to change without notice

Dwyer Instruments, Inc.
P.O. Box 373
Michigan City, IN 46361 (USA)
Phone: 219-879-8868/219-879-8000
Fax: 219-879-9057