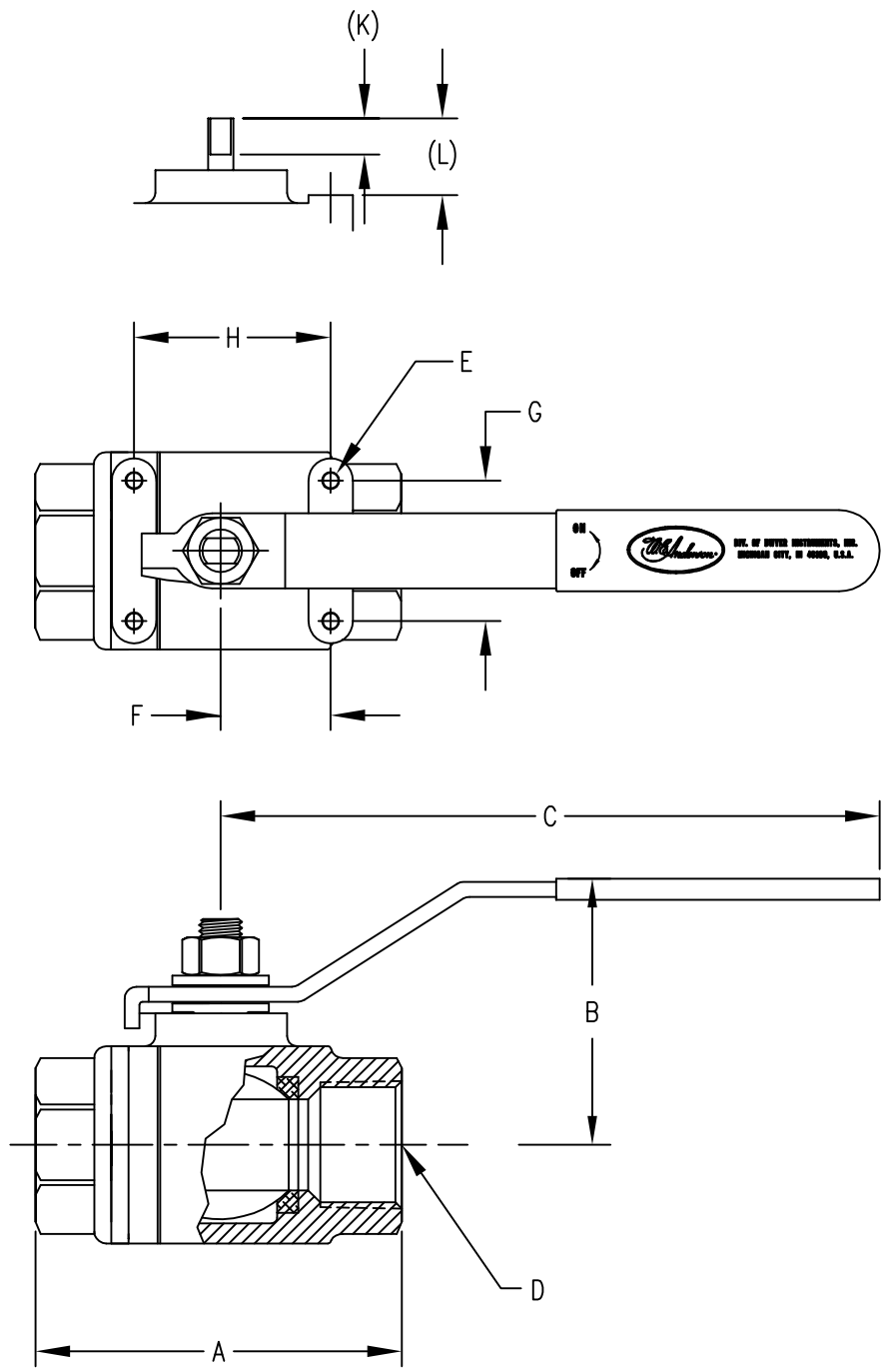

DIMENSIONAL DATA								
SIZE	A (REF)	B (REF)	C (REF)	D	E	F ±.015	G ±.015	H ±.015
1/4"	2.165	1.969	4.055	1/4" NPT	(2) 3/16-24 UNC	.500	1.102	N/A
3/8"	2.165	1.969	4.055	3/8" NPT	(2) 3/16-24 UNC	.500	1.102	N/A
1/2"	2.559	2.205	5.236	1/2" NPT	(2) 3/16-24 UNC	.500	1.102	N/A
3/4"	2.992	2.323	5.236	3/4" NPT	(2) 3/16-24 UNC	.882	1.378	N/A
1"	3.465	2.717	6.024	1" NPT	(2) 3/16-24 UNC	.882	1.378	N/A
1 1/4"	3.976	2.953	6.024	1 1/4" NPT	(2) 1/4-20 UNC	1.000	1.500	N/A
1 1/2"	4.331	3.268	7.520	1 1/2" NPT	(2) 1/4-20 UNC	1.000	1.500	N/A
2"	4.882	3.622	7.520	2" NPT	(4) 1/4-20 UNC	1.000	1.500	2.000
2 1/2"	6.299	5.039	9.724	2 1/2" NPT	(4) 1/4-20 UNC	1.382	2.165	2.764
3"	6.929	5.394	9.724	3" NPT	(4) 1/4-20 UNC	1.382	2.165	2.764

(CD) = CRITICAL DIMENSION

STANDARD TOLERANCES UNLESS NOTED:
ALL DECIMAL DIMENSIONS ± .005
ALL ANGLES ± 1°

SCALE 1:4

NO.	CHANGES	BY/DATE

DATE
DWN BY
CHKD
APPD

NAME
BV2M SERIES
TWO-PIECE
STAINLESS STEEL BALL VALVE

ACAD2002

MATERIAL

FINISH

DWYER INSTRUMENTS, INC.
MICHIGAN CITY, INDIANA 46360 U.S.A.

FR. NO.

3

NOTICE: This drawing and the principles and elements of design embodied therein are the exclusive property of DWYER INSTRUMENTS, INC. and are not to be communicated, disclosed, reproduced or used except as previously authorized in writing by such corporation and must not be submitted to outside parties for examination without the written consent of said corporation.