VA-701261-00

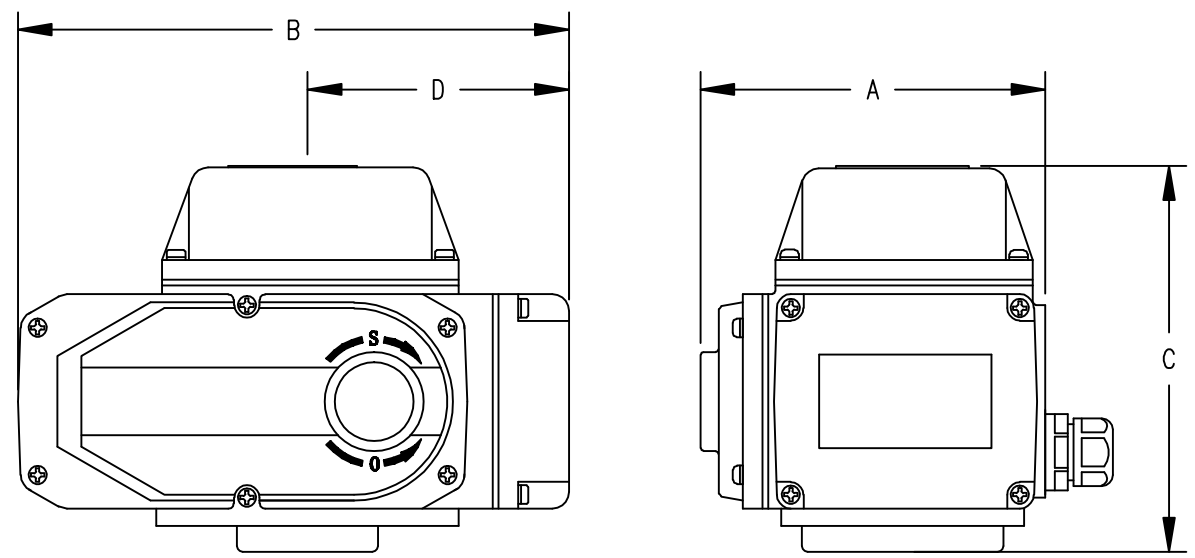

ELECTRIC ACTUATOR

ACT	TD01/ MD01	TD02/ MD02	TD03/ MD03	TD04/ MD04	TD05/ MD05	TD06/ MD06	TD07/ MD07	TD08/ MD08	TD09/ MD09
A	4-7/16" 113mm	4-7/16" 113mm	4-3/4" 121mm	6-7/32" 158mm	6-7/32" 158mm	6-7/32" 158mm	8-17/32" 217mm	8-17/32" 217mm	8-17/32" 217mm
B	6-9/32" 160mm	6-9/32" 160mm	7-11/16" 196mm	10-1/32" 255mm	10-1/32" 255mm	10-1/32" 255mm	12-7/32" 310mm	12-7/32" 310mm	12-7/32" 310mm
C	4-1/32" 102.5mm	4-1/32" 102.5mm	4-31/32" 126mm	5-13/16" 148mm	5-13/16" 148mm	5-13/16" 148mm	6-1/2" 165mm	6-1/2" 165mm	6-1/2" 165mm
D	3-1/32" 77mm	3-1/32" 77mm	3-7/8" 98mm	5-1/4" 134mm	5-1/4" 134mm	5-1/4" 134mm	6-3/8" 162mm	6-3/8" 162mm	6-3/8" 162mm

(CD) = CRITICAL DIMENSION
STANDARD TOLERANCES UNLESS NOTED:
ALL DECIMAL DIMENSIONS ± .005
ALL ANGLES ± 1°

NO.	CHANGES	BY/DATE

DATE
DWN BY
CHKD
APPD

NAME

ARTWORK
SERIES ACT
ELECTRIC ACTUATOR
(FOR REFERENCE ONLY)

ACAD2002

MATERIAL

FINISH

DWYER INSTRUMENTS, INC.
MICHIGAN CITY, INDIANA 46360 U.S.A.

NOTICE: This drawing and the principles and elements of design embodied therein are the exclusive property of DWYER INSTRUMENTS, INC. and are not to be communicated, disclosed, reproduced or used except as previously authorized in writing by such corporation and must not be submitted to outside parties for examination without the written consent of said corporation.

FR. NO. VA-701261-00